300, 400, 500 and 600 Base Unit Assembly

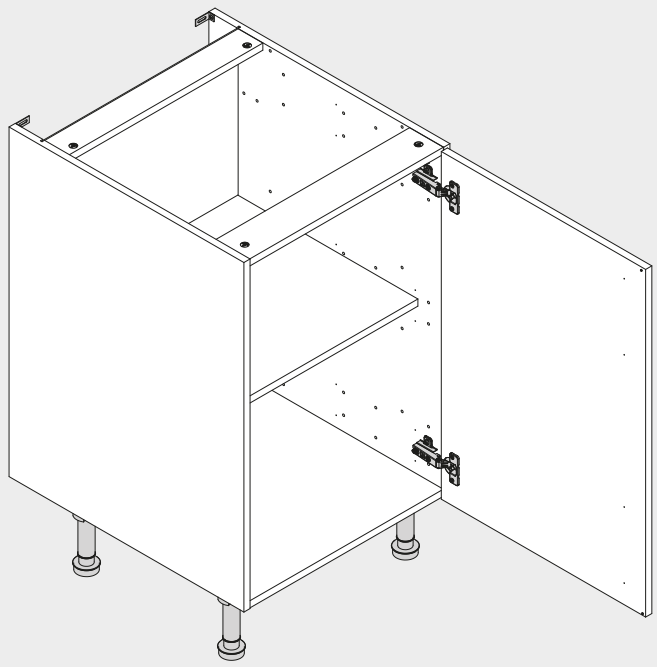

Components

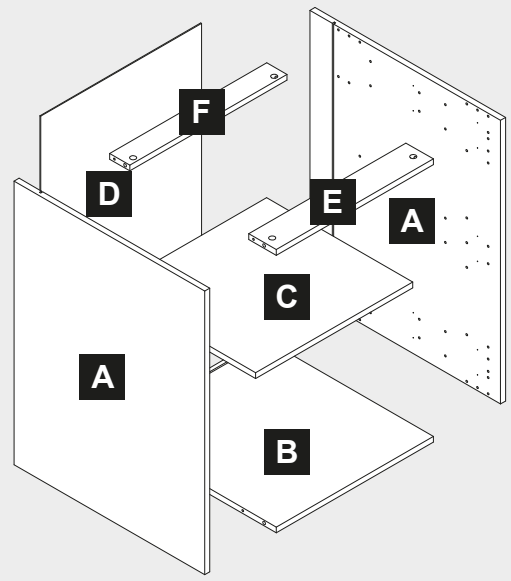

Important Information

Caution: Some pieces of hardware could be hazardous to small children. Keep all these items out of reach and do not leave children unattended in the assembly area.
Please read these instructions carefully before proceeding. Some of the units are quite large and may have to be assembled in the room where they are to be installed.
Note: Due to variation in wall conditions no screws are supplied for fixing the units to the wall. If in doubt consult an expert. Assemble the unit on a clean solid work surface. Screws for joining cabinets together are not supplied.
In the interest of continuing improvements we reserve the right to amend or adjust the specifications without prior notice. Errors and omissions excepted.
These units have been designed to give you years of pleasure and satisfaction. You can help to maintain the original beauty of your kitchen by following these guidelines.
Cleaning: Any spillage, even water, should be removed from the surface immediately. Remove any marks with a soft damp cloth and mild household detergent. Wipe over with a damp cloth to remove any excess moisture and dry with a soft, clean cloth. Do not use solvents, abrasive cleaners or pigmented glass cleaners.

Helpful Information
Every effort has been made to ensure that this product leaves the factory in perfect condition. In the unlikely event that an item is damaged or incorrect, please follow these instructions:
Replacement fascias/doors: Please call **01132 013495** between 8am and 5pm, Monday to Friday. Please have your batch number and product code ready to quote from the side of the box in order to request a replacement. On receipt of all the required information this will be despatched directly to your home within five working days.
Replacement, damaged or incorrect fittings or cabinet parts: Please contact the store where the item was purchased for replacements.

Ref. No.	Item	Quantity
150101	3.5x13mm	8
150202	4.5x13mm	5
154084		8
154085		8
154068		2

Ref. No.	Item	Quantity
154004		8
151999		2
154024		4
152104		2
152112		2

Ref. No.	Item	Quantity
152401		4
152400		4
152402		2
151701		2 (If required)

Tools Required

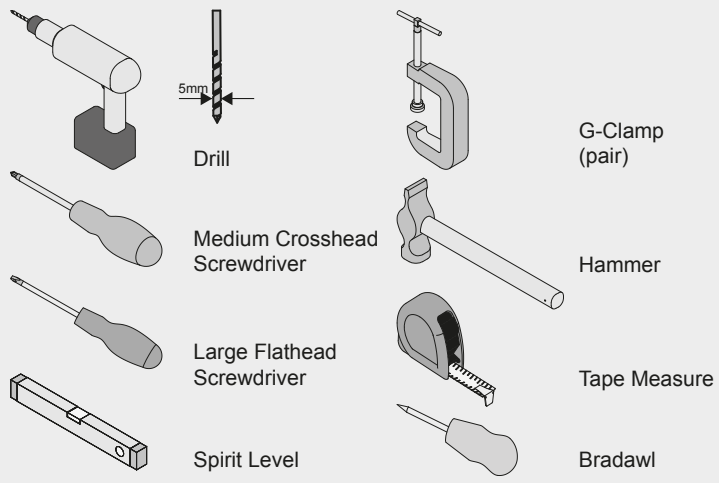

1 — 2 Assembly Instructions

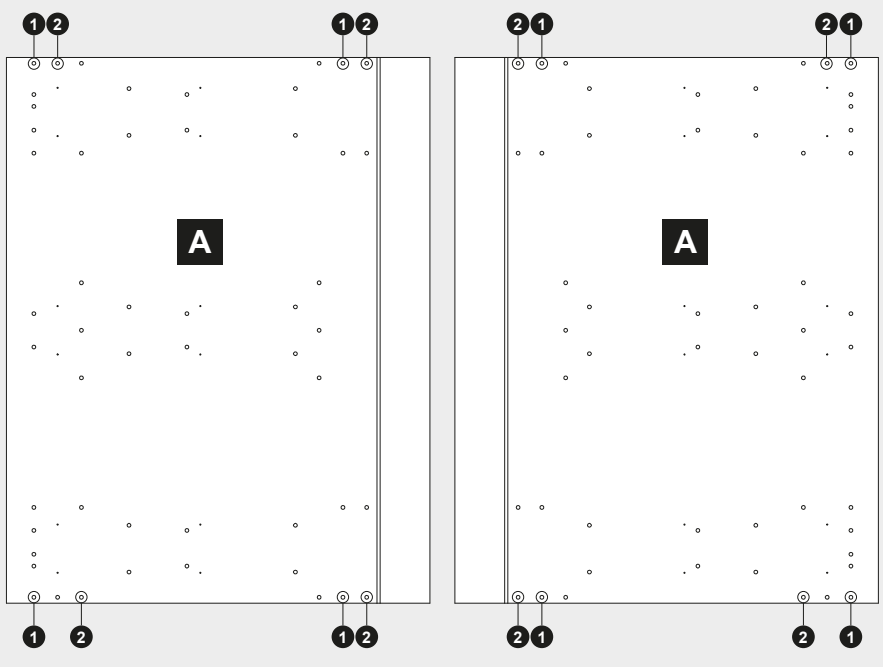

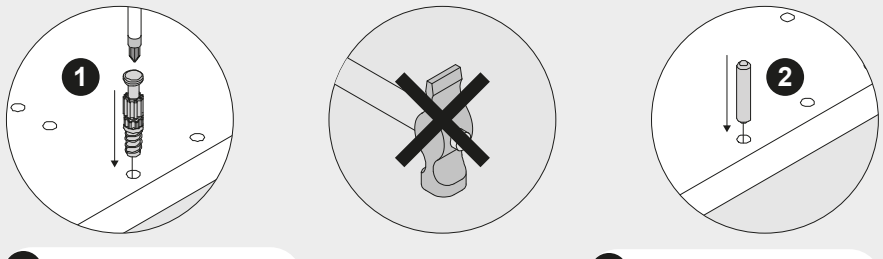

1 — 154084 — 8

2 — 154004 — 8

3

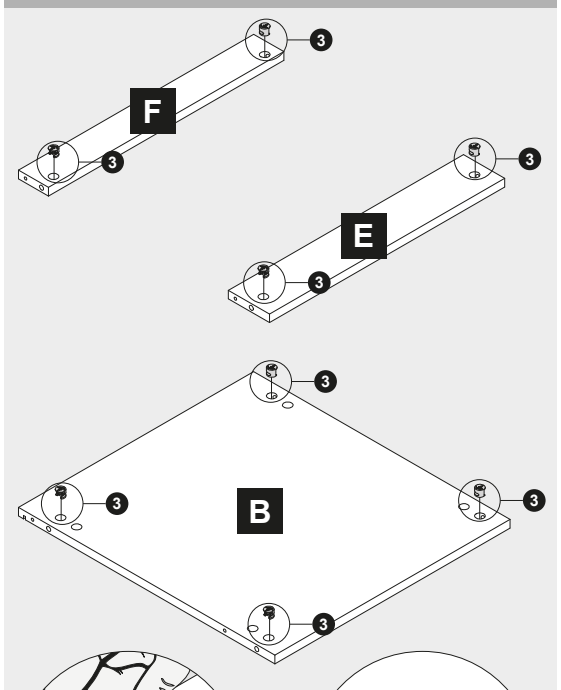

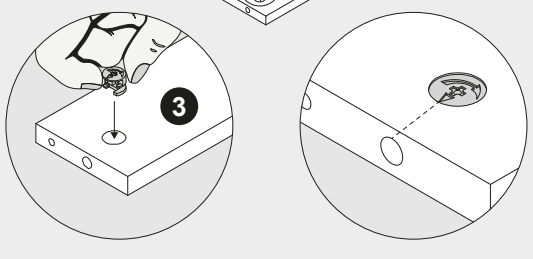

3 — 154085 — 8

4 — 5

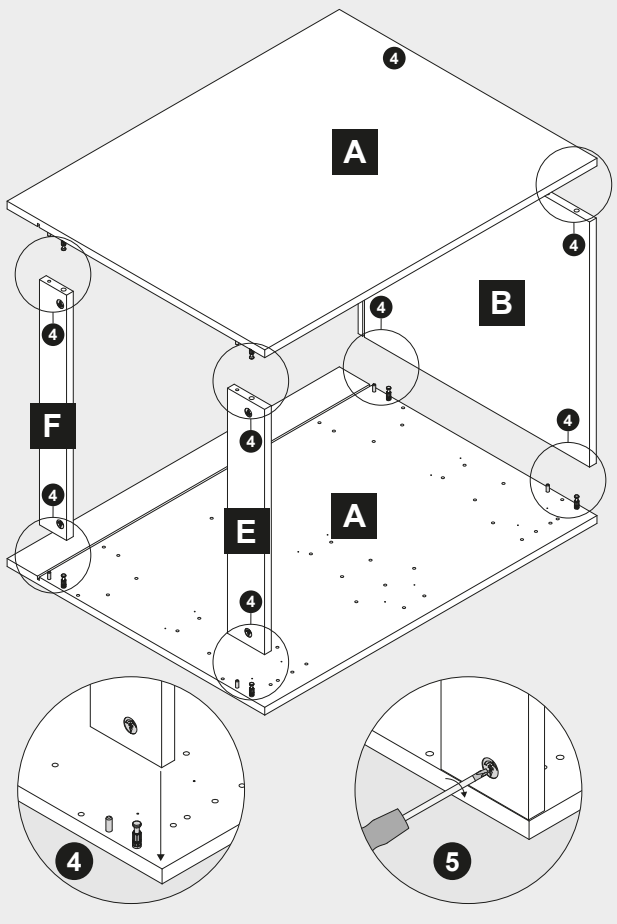

Do Not Over Tighten

Start — Locked

6

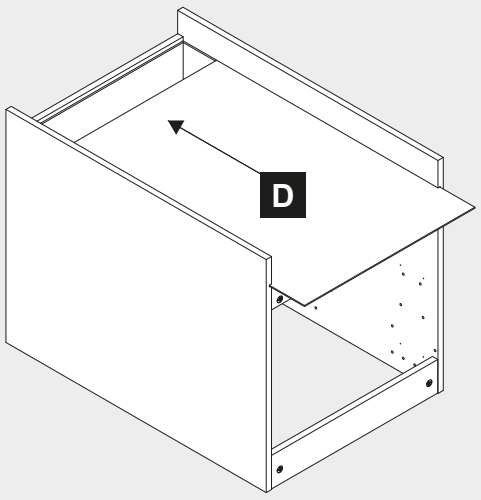

7

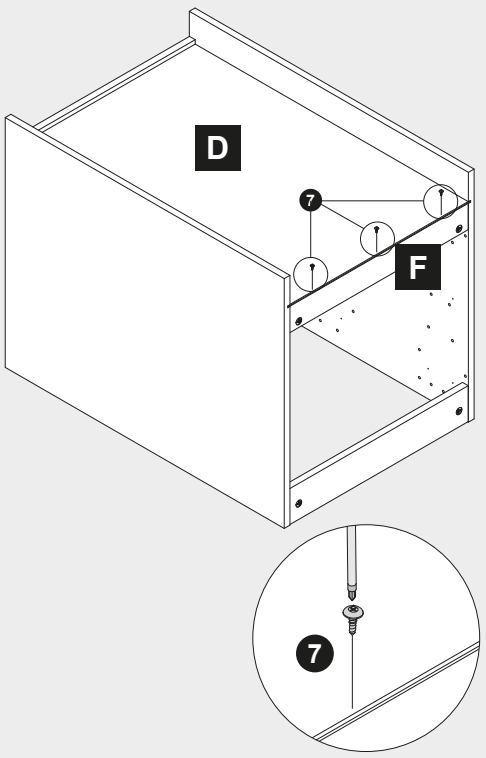

7	150202	3

8 — 9

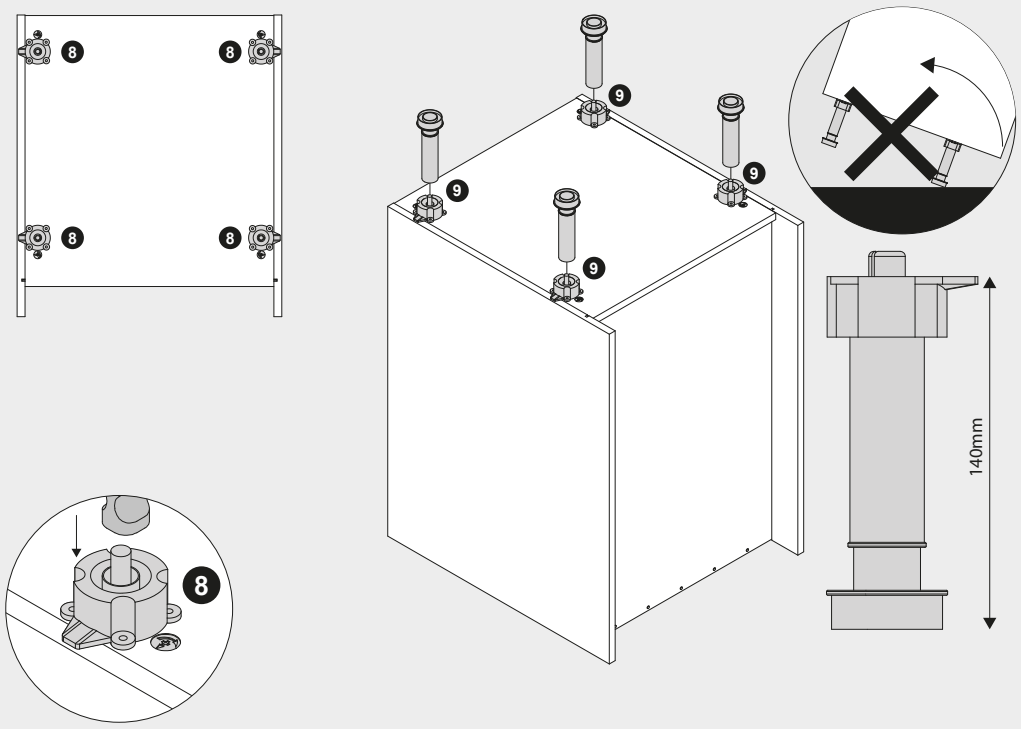

8	152401	4
9	152400	4

10 — 11 Installation Instructions

Note: Use wall appropriate screws (not supplied) with brackets fitted in step 10 to fix unit to wall.

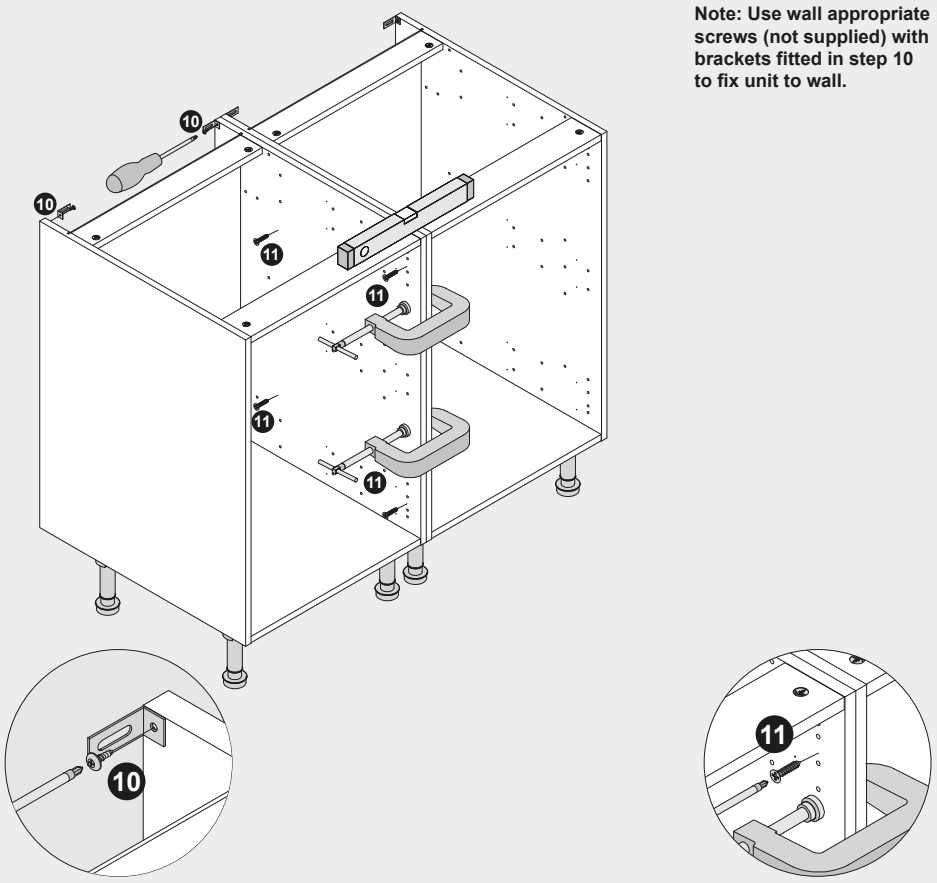

10	150202	2
10	154068	2
11	Length <25mm (Not supplied)	4

12 — 14

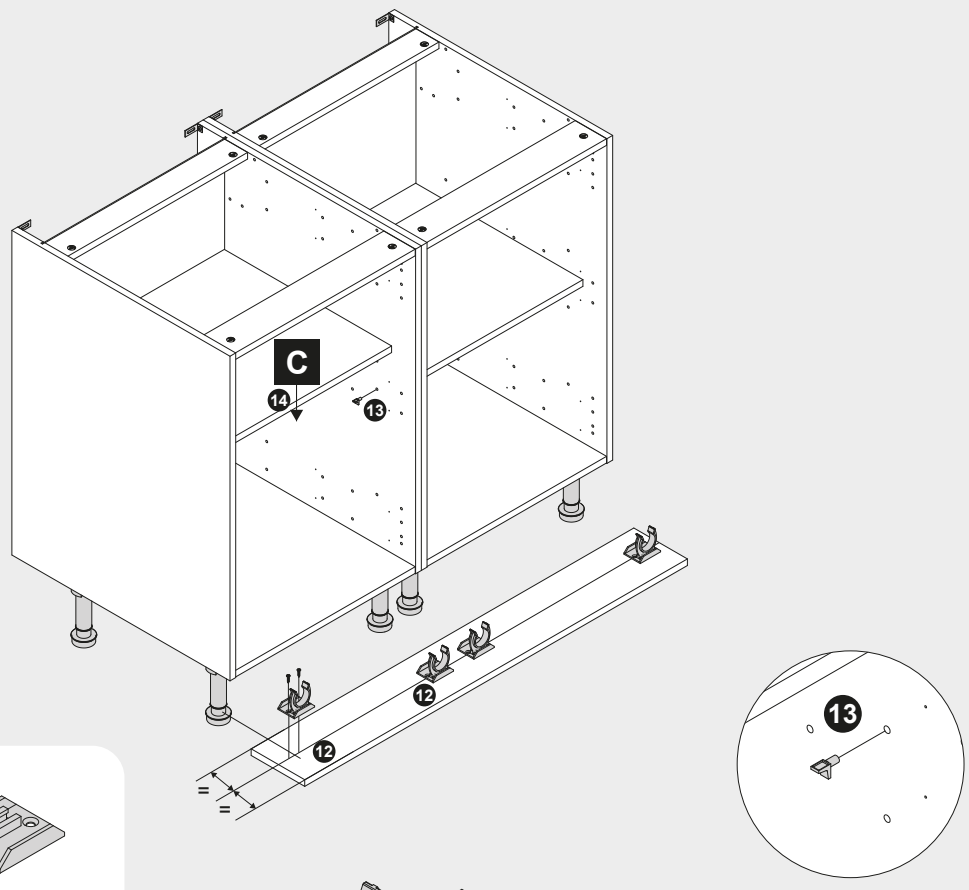

12	152402	2
12	150101	4
13	154024	4

15 — 17

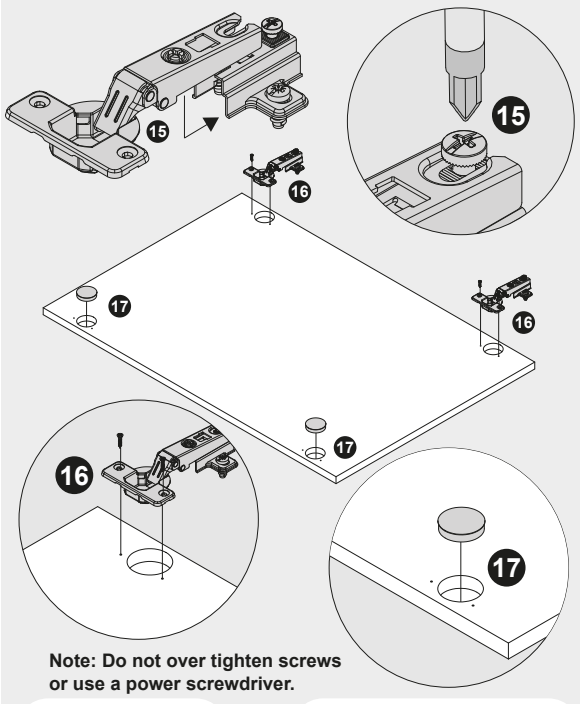

Note: Do not over tighten screws or use a power screwdriver.

16	150101	4
17	151701	2 (If required)

18 — 20

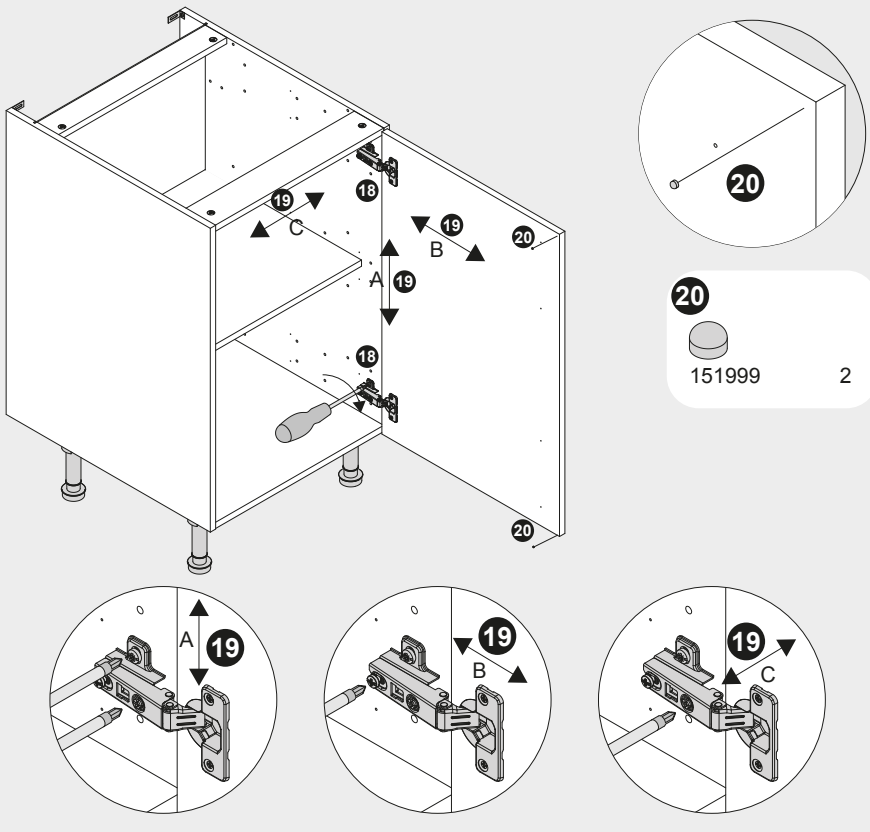

20	151999	2

21

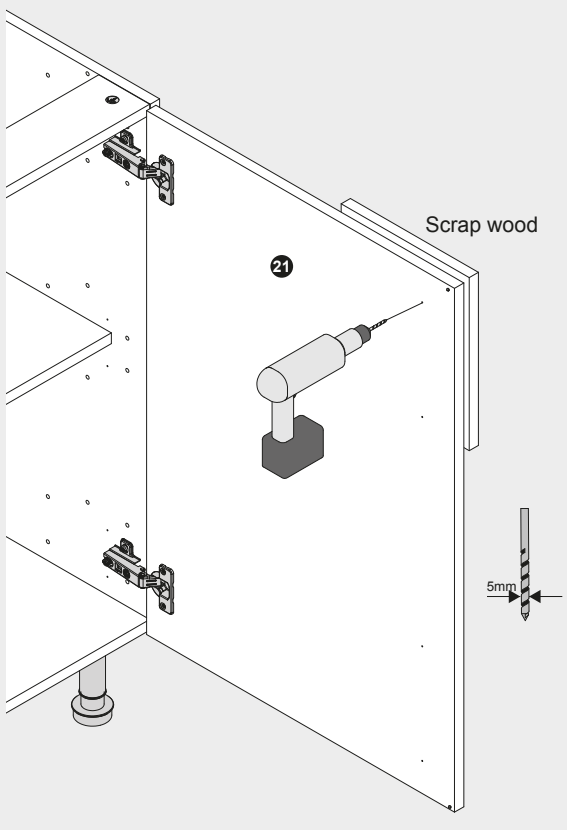

Ref. 170899 (05)