AARON
Riser rail assembly

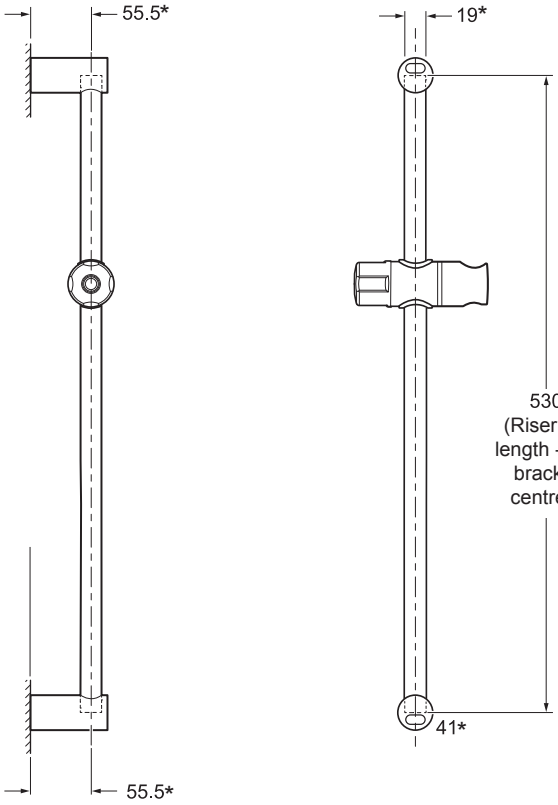

* All dimensions listed regarding the product and installation are approximate.
Please read the fitting instructions before proceeding.

Installation Instructions

INSTALLERS PLEASE NOTE THESE INSTRUCTIONS ARE TO BE LEFT WITH THE USER

P-5112 Aaron

2180432J April 2012

FITTING THE AARON RISER RAIL ASSEMBLY

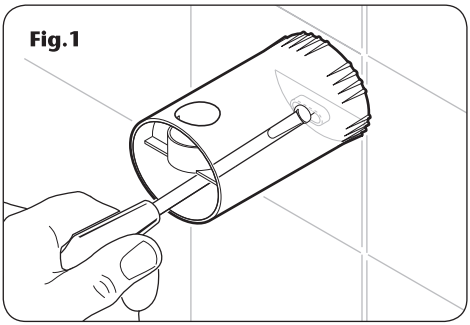

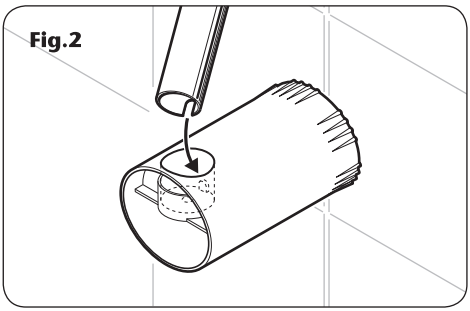

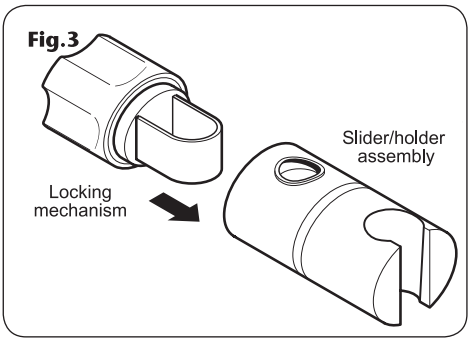

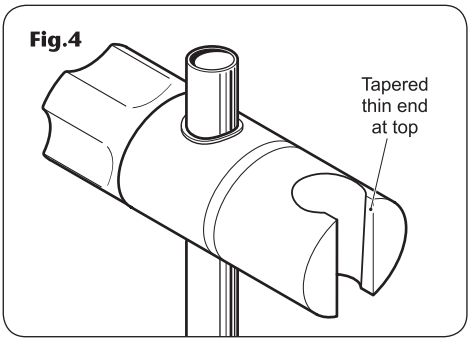

WARNING!

Check there are no hidden cables or pipes before drilling holes for wall plugs. Use great care when using power tools near water. The use of a residual current device (RCD) is recommended when using power tools.

IMPORTANT: ***The kit should be fitted in the following sequence to allow correct measurement and placement of the bracket holes.***

Decide the position for the rail on the wall within the shower area. Proceed as follows:

- Offer the lower bracket to the wall.

Note: ***The lower bracket has a small peg in the riser rail hole.***

- Position the bracket and mark the centre hole. Remove the bracket then drill and plug the wall. *(An appropriate drill bit should be used. If the wall is plasterboard or a soft building block, appropriate wall plugs should be fitted).*
- Replace the bracket to the wall and secure in place using the screw supplied **(fig.1)**.

Note: ***The locating hole is elongated to allow for some horizontal adjustment.***

- Locate the rail into the bracket. Make sure it fits properly. The notch in the riser rail should be located onto the peg in the bracket **(fig.2)**.
- Fit the upper bracket onto the riser rail making sure the rail is vertical. Mark the centre hole. Remove the bracket and rail, then drill and plug the wall.
- Fit the locking assembly to the slider/holder so that the holes align, then slide onto the rail **(fig.3)**.

FITTING THE AARON RISER RAIL ASSEMBLY

- Tighten the holder to the rail. Make sure the tapered thin end of the showerhead holder is in the upper position **(fig.4)**.

  The *soap dish is an optional extra and can be purchased from Customer Care, please see No: 6 in the spares section for part numbers.

- Slide the hose retainer onto the bottom of the riser rail **(fig.5)**. *If the soap dish has been purchased please refer to **(fig.5a).**

- Place the rail onto the lower bracket. Replace the upper bracket onto the rail and secure to the wall with the screw supplied.

- Fit the end caps onto both brackets. The end caps will only fit one way.

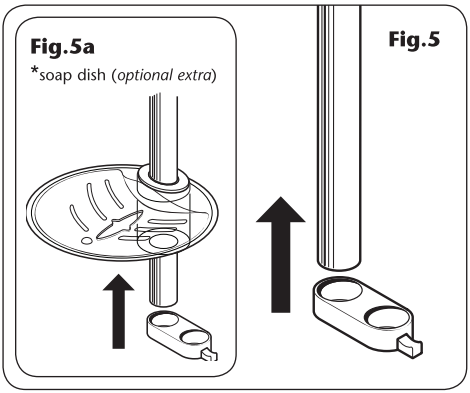

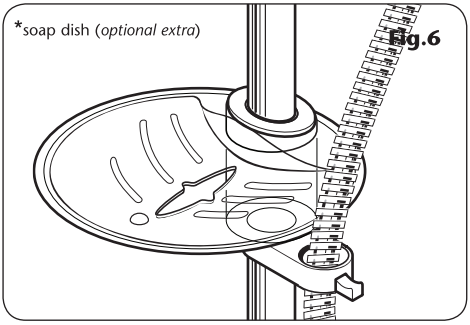

FITTING THE HOSE AND SHOWERHEAD

- Feed the flexible hose through the hose retainer **(fig.6)** so that it acts as a retaining ring *(The hose retainer* **MUST** *be fitted to comply with Water Regulations).*

Note: The holder is slightly tapered and the showerhead and hose will only fit from one direction.

IMPORTANT: It is the conical end of the hose which grips into the holder.

The showerhead will not fit in the holder without the hose attached.

- Screw the flexible hose to the shower outlet and showerhead, making sure the supplied washers are in place at both ends of the flexible hose **(fig.7)**.

- Place the showerhead into the holder and check that it fits correctly **(fig.8)**.

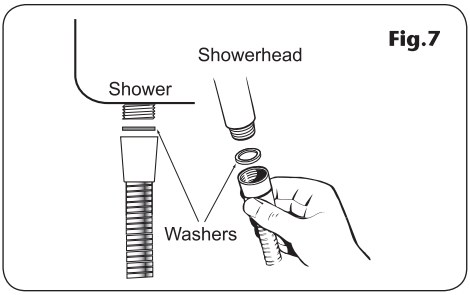

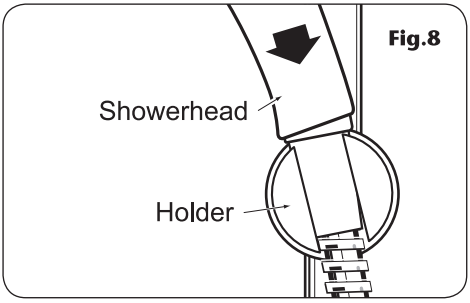

SPARE PARTS

Ref.	*Description*	*Part Number*
	Kit (without riser rail)	
	chrome	88900000
	white †(no soap dish)	88900008
	white	88900009
1.	Brackets & trims (pair)	
	white	83310440
	chrome	83308340
2.	Trims (single)	
	white	83310450
	chrome	83308350
3.	Riser rail – 19mm	
	aluminium	88800008
	chrome	88800000
4.	Showerhead holder	
	white	83310460
	chrome	83308360
5.	Hose retainer	
	white	83310480
	chrome	83308380
6.	†Soap dish *(optional extra)*	
	white	83310470
	clear	83308370

Flexible hoses available in the following sizes:

1.00 m in white, chrome and gold
1.25 m in white, chrome and gold
1.75 m in chrome only

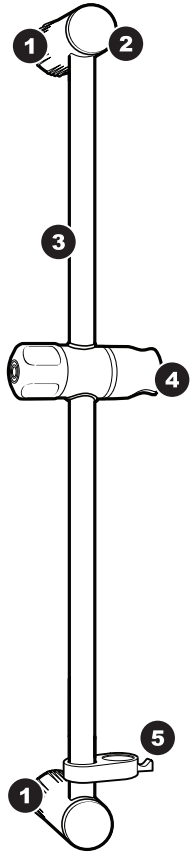

† Please note that in some instances, a soap dish may be supplied.

Please refer to shower installation and operating instructions for service details