150 Pull-Out Base Unit Assembly

TH Note: If fitting a "True Handleless" kitchen, some components will differ to those shown in this instruction and will also be packaged separately. Please refer to your True Handleless guide to Receiving for further details on the different components and difference in installation.

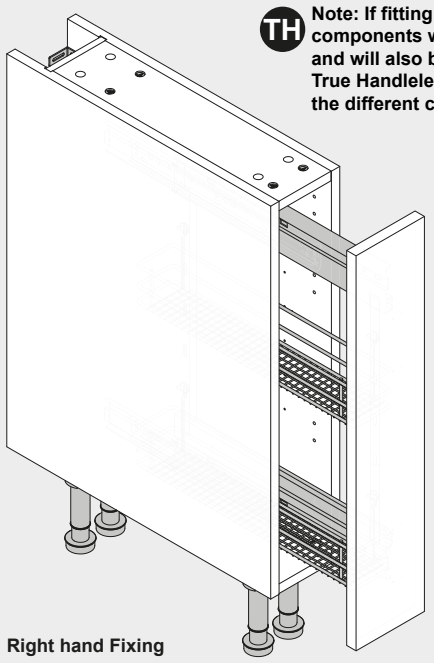

Right hand Fixing

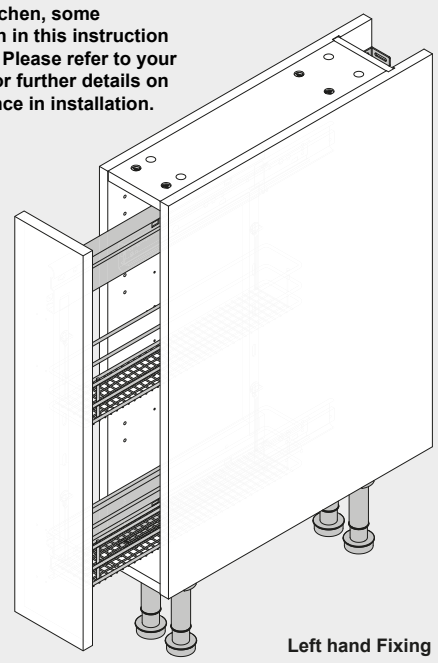

Left hand Fixing

Components

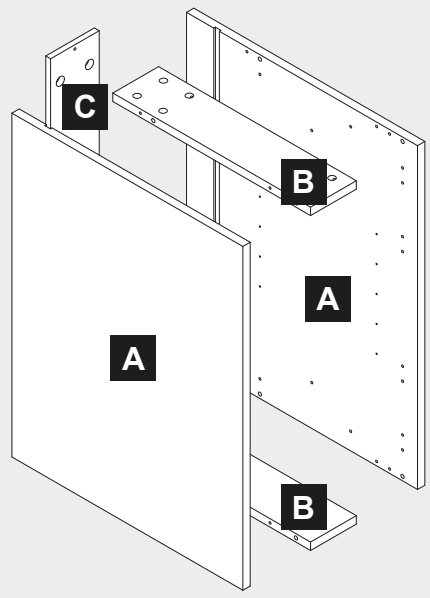

Important Information - **True Handleless Kitchens Installers**: See Note Above TH

Caution: Some pieces of hardware could be hazardous to small children. Keep all these items out of reach and do not leave children unattended in the assembly area.
Please read these instructions carefully before proceeding. Refer to the Guide to Receiving and Installing your Kitchen booklet for further information.
Note: Due to variation in wall conditions no screws are supplied for fixing the units to the wall. If in doubt consult an expert. Assemble the unit on a clean solid work surface.
In the interest of continuing improvements we reserve the right to amend or adjust the specifications without prior notice. Errors and omissions excepted.
This unit is fitted with a wirework system. The wirework is supplied separately. These instructions advise when to fit parts of the wirework system.
Follow the instructions supplied with the wirework for wirework assembly.
Every effort has been made to ensure that this product leaves the factory in perfect condition. In the unlikely event that an item is damaged or incorrect, please contact the customer services department.

bsi. ISO 9001 Quality Management
FM 665131

Note - Fitting Handles: (1) Decide where you are going to position each handle to maintain symmetry around your kitchen. (2) Measure the handle centres and mark off each door/drawer position. (3) Drill through the door/drawer using a fine drill (<2.5mm), then drill back from the rear face using a 4.5mm drill. (4) Attach with the fixings provided with your handle.

Ref. No.	Item	Quantity
150101	3.5x12mm	4
150202	4x12mm	4
150201	4x15mm	16
150199	4.5x45mm	2
154082		8
154085		8
154004		8

Ref. No.	Item	Quantity
150308		2
150309		2
154047		2
151500		2
151999		4

Ref. No.	Item	Quantity
152401		4
152418		4
152402		2

Item	Quantity
Note: These are supplied with the wirework.	
4.5x15mm	6
4.5x13mm	8

Tools Required

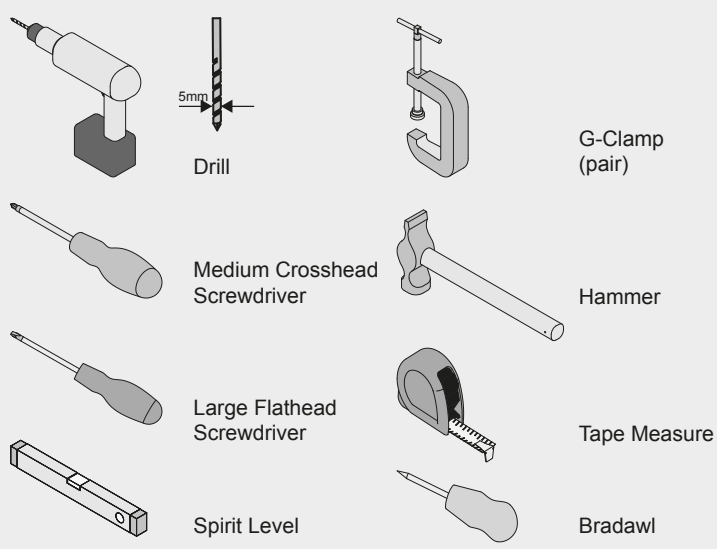

1 — 2 Assembly Instructions

Note: These instructions show a right hand fixing. Mirror for a left hand fixing. It is advisable to fit the wirework runners at this point. See wirework instructions for further details.

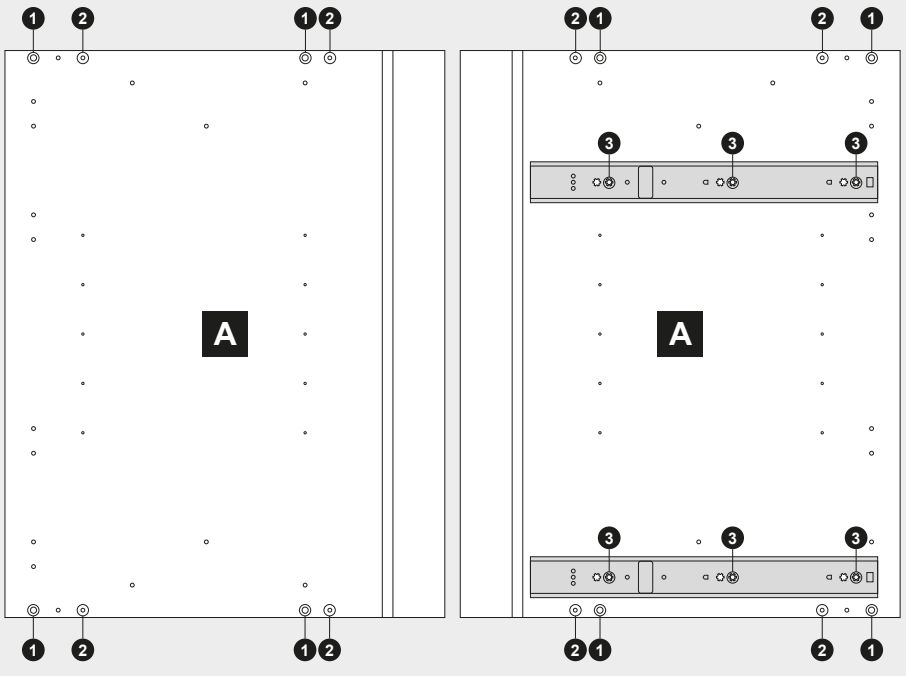

TH Modification required at this stage, see True Handleless guide for further details.

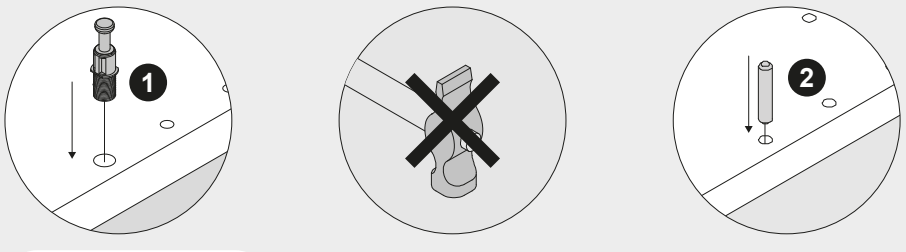

1	154082	8
2	154004	8
3	4.5x15mm Supplied with wirework	6

4

TH Modification required at this stage, see True Handleless guide for further details.

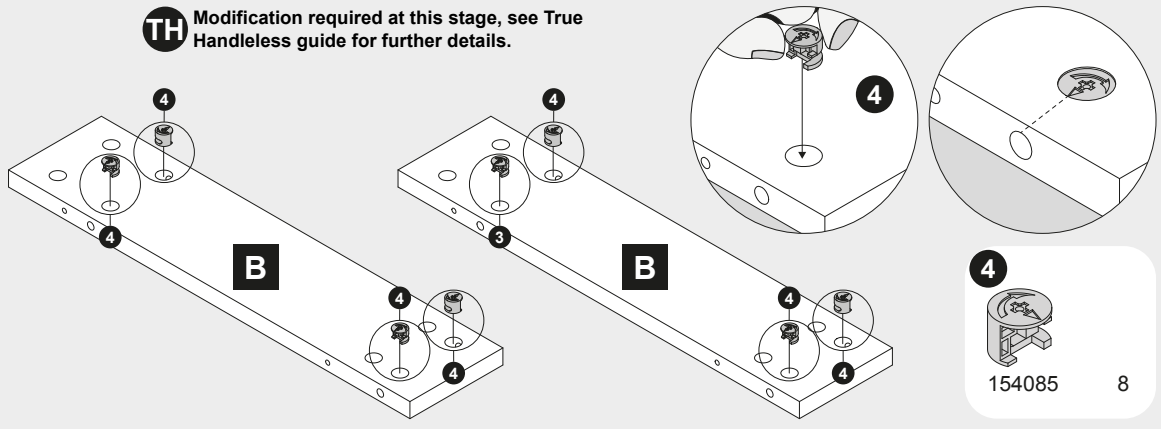

4	154085	8

5 — 6

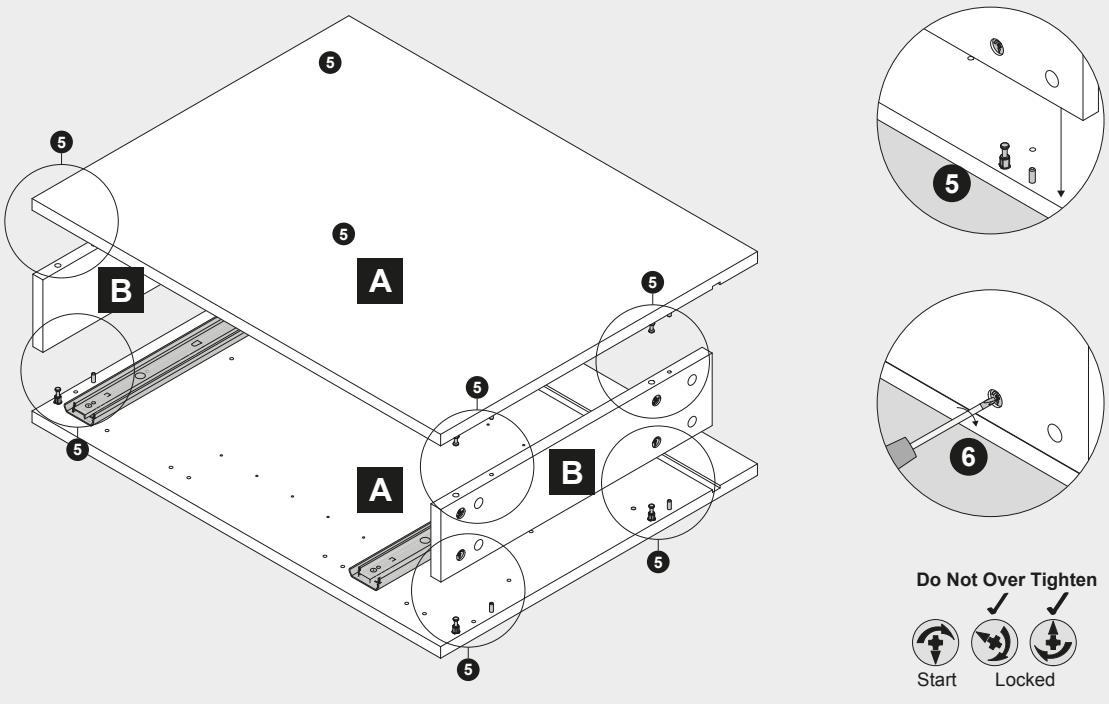

Do Not Over Tighten

7 — 9

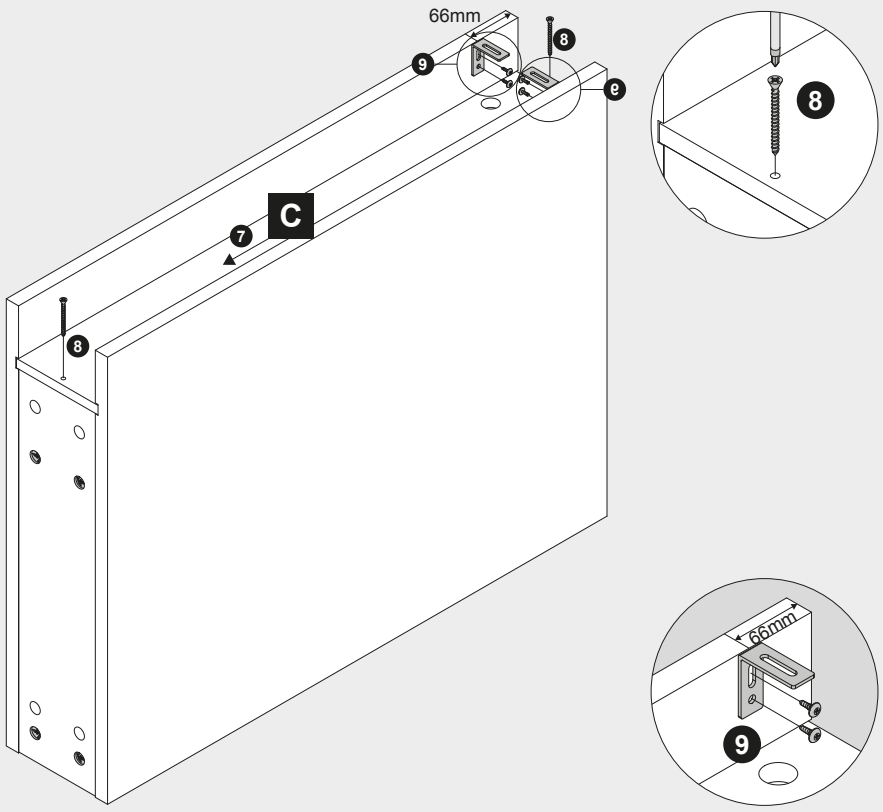

8
150199 2

9
150202 4
154047 2

10 — 11

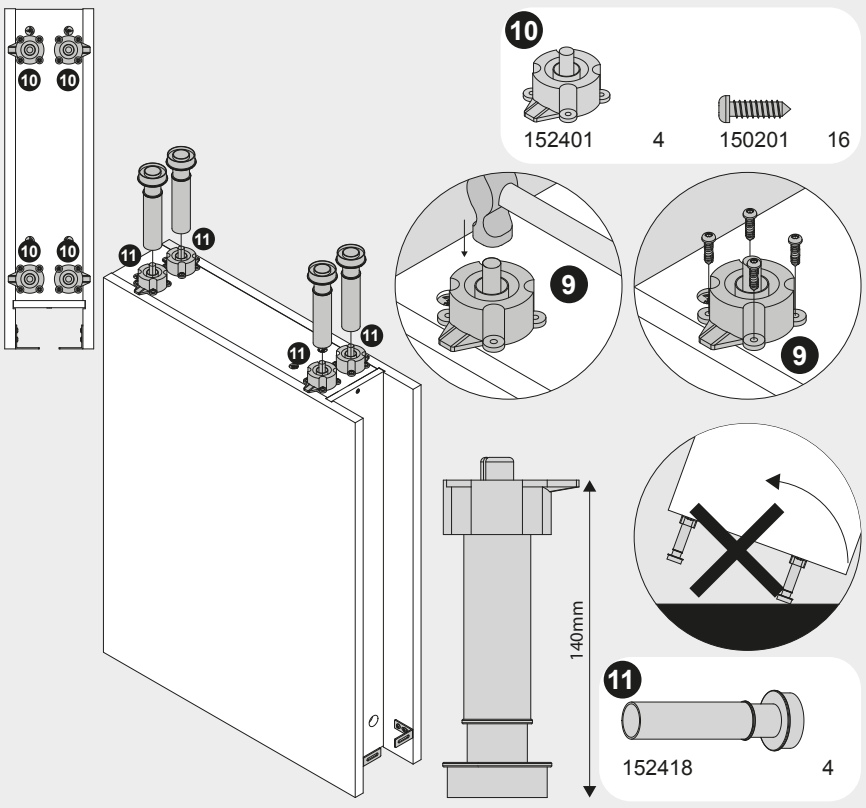

10
152401 4
150201 16

11
152418 4

12

Note: It is advisable to fit the frame to the runners at this point. See wirework instructions for further details.

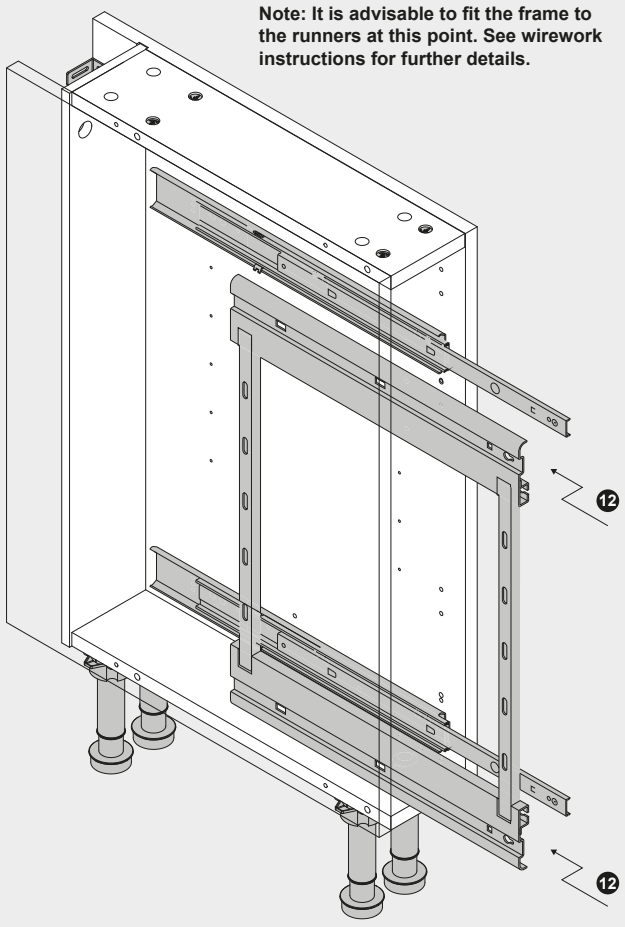

13 — 14 Installation Instructions

13
150308 2
150309 2

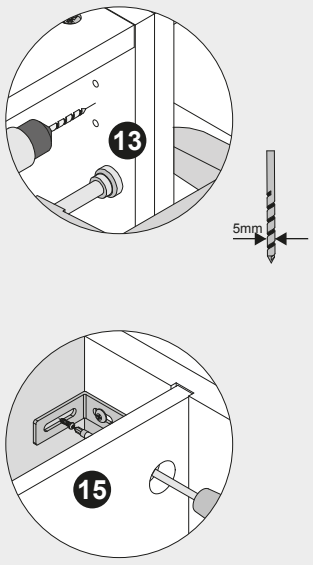

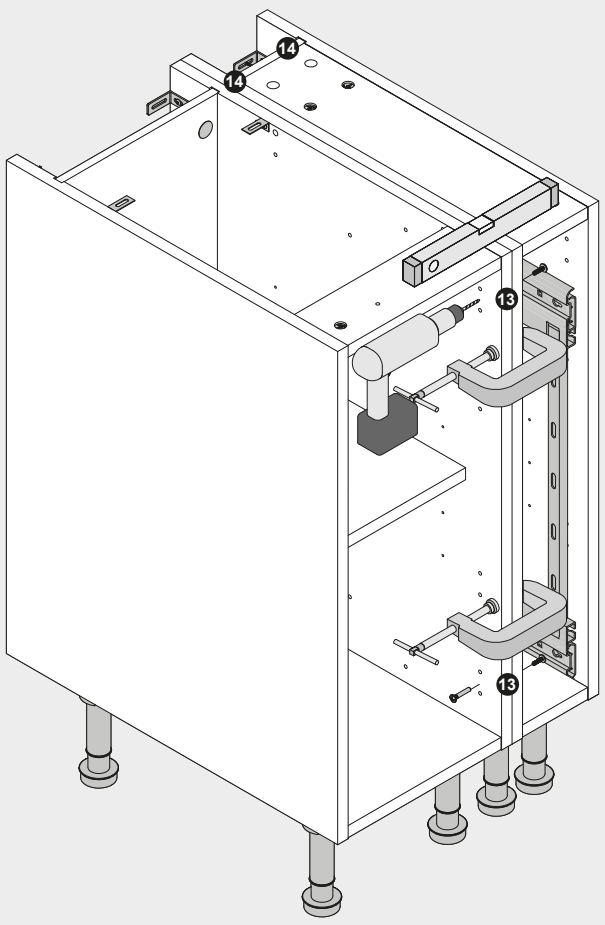

15
Appropriate to wall type
(Not supplied) 2

15 — 16

15
151500 2

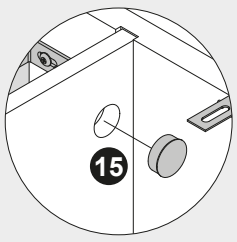

16
152402 2
150101 4

17 — 19

Right hand Fixing **Left hand Fixing**

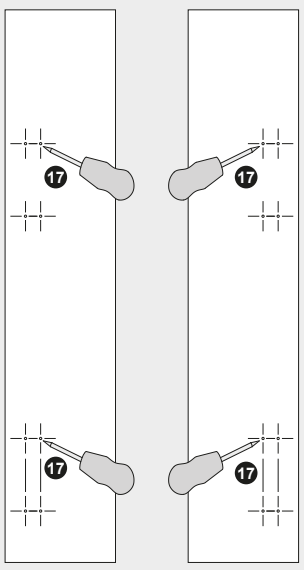

Note: Mark the holes for the brackets with a bradawl on the inside of the fascia. Check wirework instructions for measurements.

18
4.5x13mm
Supplied with wirework 8

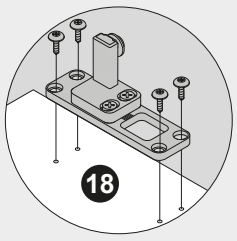

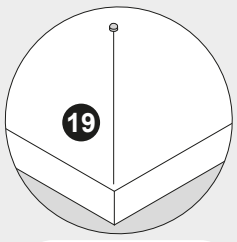

Note: Do not over tighten screws or use a power screwdriver.

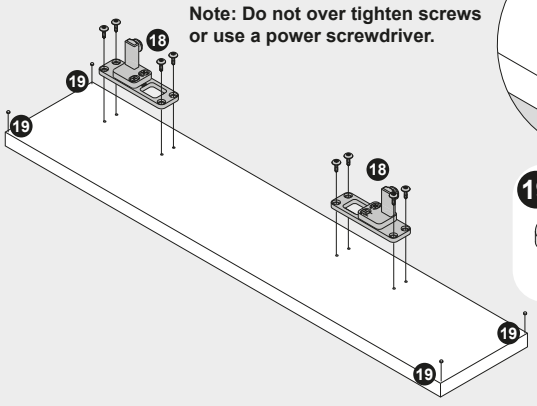

19
151999 4

20
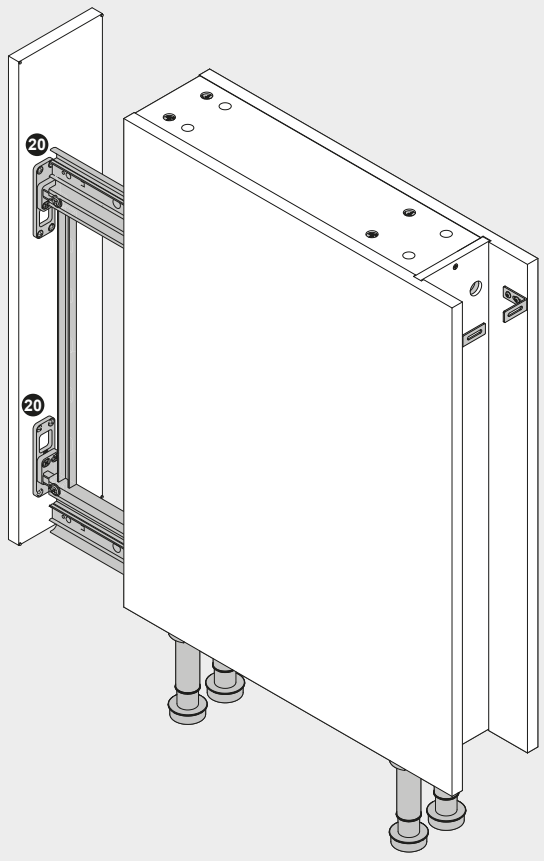
Note: Check wirework instructions for directions on altering fascia position to fit.