# 300, 400, 450, 500 and 600 Base Unit Assembly

**TH Note: If fitting a "True Handleless" kitchen, some components will differ to those shown in this instruction and will also be packaged separately. Please refer to your True Handleless guide to Receiving for further details on the different components and difference in installation.**

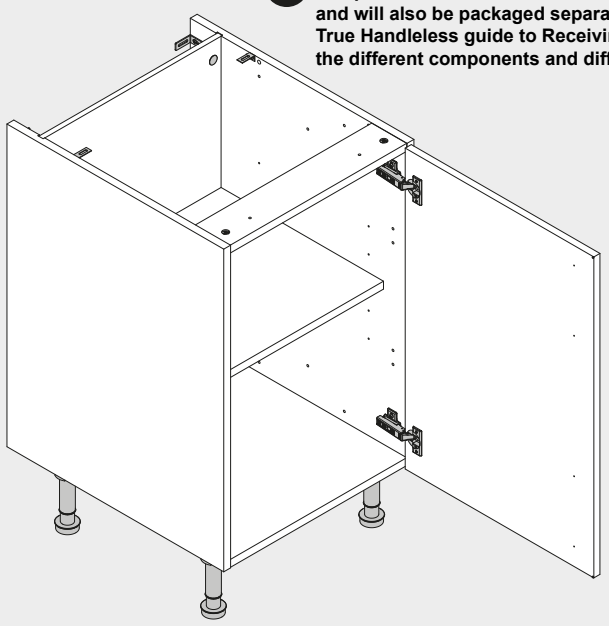

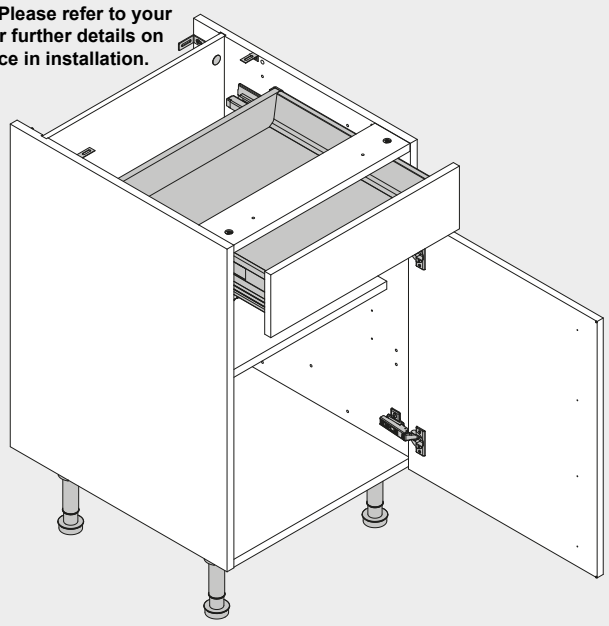

## Components

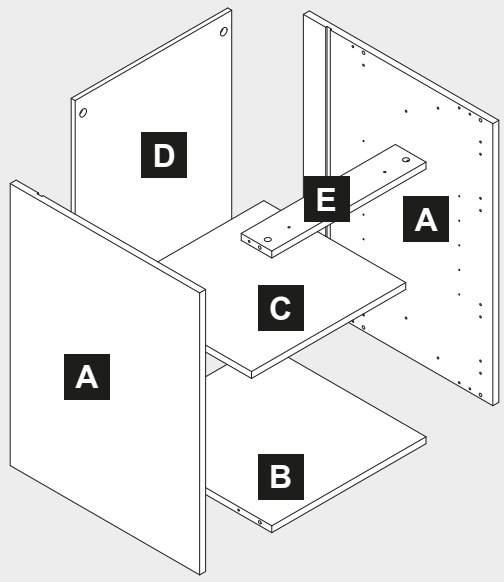


## Important Information - **True Handleless Kitchens Installers**: See Note Above TH

**Caution: Some pieces of hardware could be hazardous to small children. Keep all these items out of reach and do not leave children unattended in the assembly area.**
Please read these instructions carefully before proceeding. Refer to the Guide to Receiving and Installing your Kitchen booklet for further information.
**Note:** Due to variation in wall conditions no screws are supplied for fixing the units to the wall. If in doubt consult an expert. Assemble the unit on a clean solid work surface.
In the interest of continuing improvements we reserve the right to amend or adjust the specifications without prior notice. Errors and omissions excepted.
These units may be fitted with a drawer system. The drawers are supplied separately. These instructions show the runner positions for the drawer system.
Follow the instructions supplied with the drawers for drawerbox assembly.
Every effort has been made to ensure that this product leaves the factory in perfect condition. In the unlikely event that an item is damaged or incorrect, please contact the customer services department.

bsi. ISO 9001 Quality Management
FM 665131

**Note - Fitting Handles:** (1) Decide where you are going to position each handle to maintain symmetry around your kitchen. (2) Measure the handle centres and mark off each door/drawer position. (3) Drill through the door/drawer using a fine drill (<2.5mm), then drill back from the rear face using a 4.5mm drill. (4) Attach with the fixings provided with your handle.

| Ref. No. | Item | Quantity |
|---|---|---|
| 150101 | 3.5x12mm | 10 |
| 150202 | 4x12mm | 8/12 |
| 150201 | 4x15mm | 16 |
| 150199 | 4.5x45mm | 2 |
| 154082 | | 6 |
| 154085 | | 6 |
| 154004 | | 6 |
| 150308 | | 2 |
| 150309 | | 2 |

| Ref. No. | Item | Quantity |
|---|---|---|
| 154027 | | 4 |
| 154068 | | 4/6 |
| 154047 | | 2 |
| 152181 | | 2 |
| 152162 | | 2 |
| 151999 | | 6 |

| Ref. No. | Item | Quantity |
|---|---|---|
| 152401 | | 4 |
| 152418 | | 4 |
| 152402 | | 2 |
| 152148 | | 2 |
| 151500 | | 2 |

## Tools Required

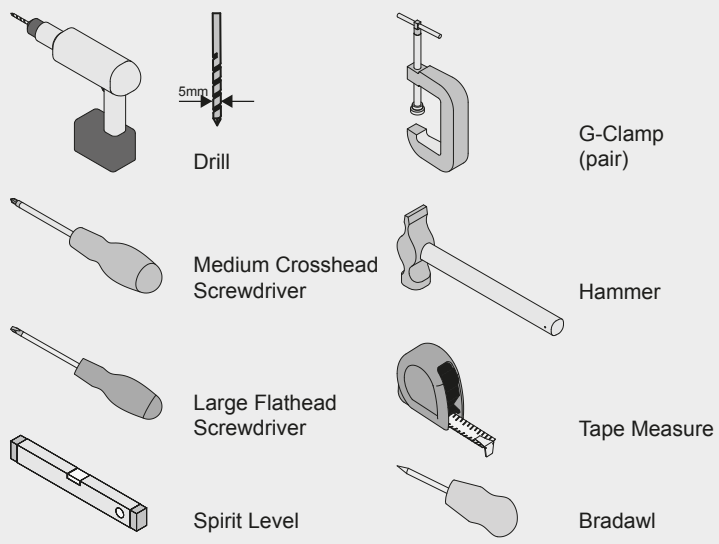


## 1 — 2 Assembly Instructions

**TH Modification required at this stage, see True Handleless guide for further details.**

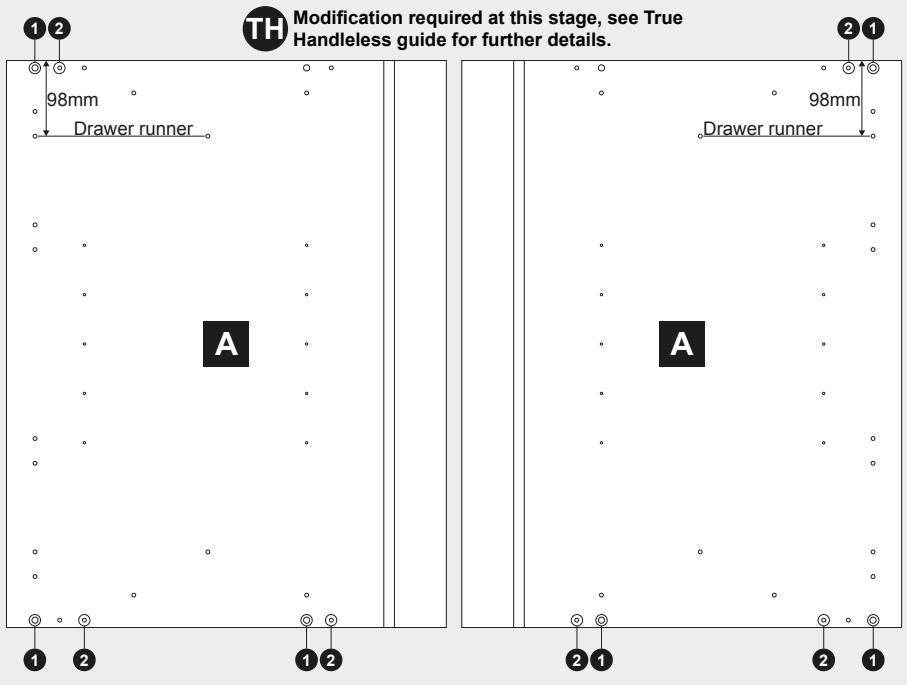


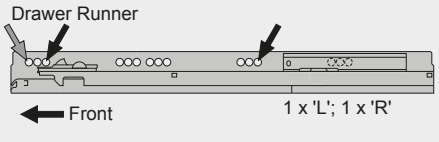


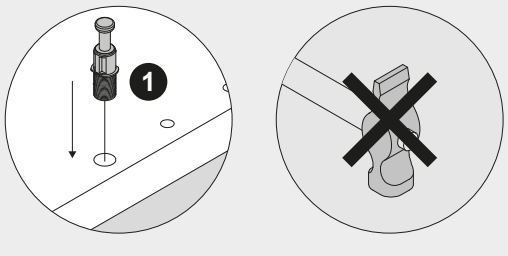

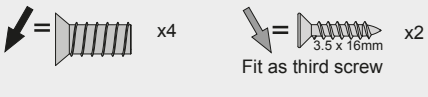


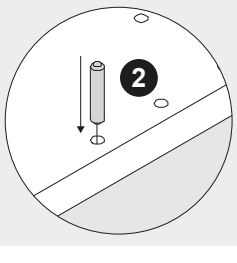

1 — 154082 — 6

2 — 154004 — 6

## 3

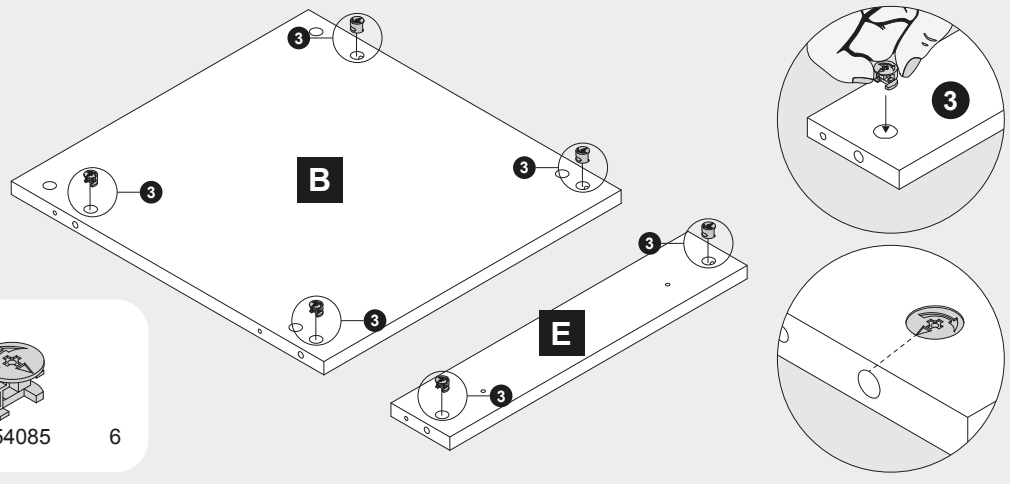


3 — 154085 — 6

## 4 — 5

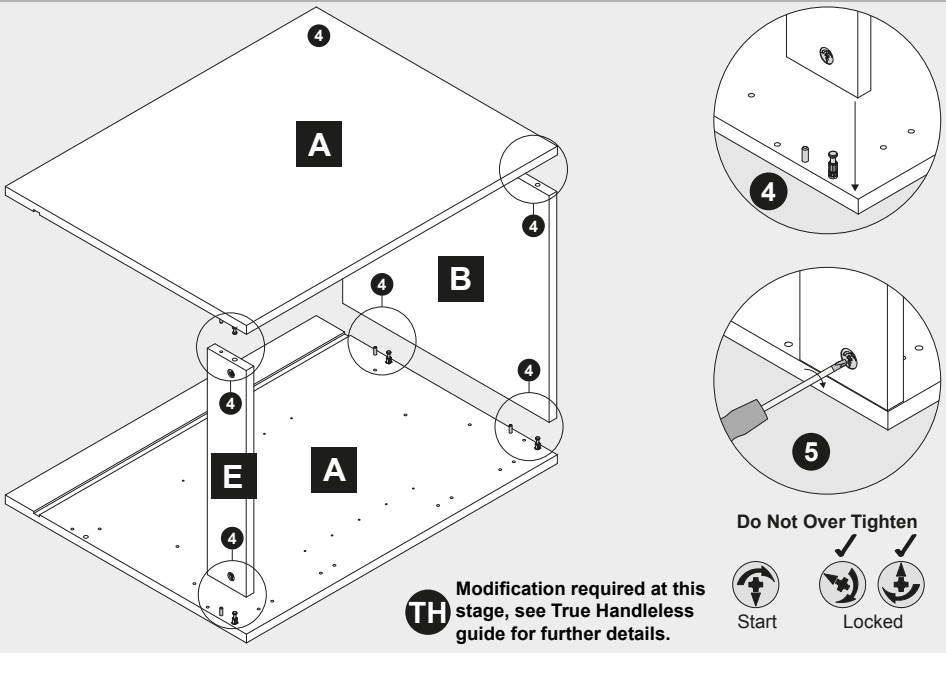


**TH Modification required at this stage, see True Handleless guide for further details.**

**Do Not Over Tighten**

## 6 — 9

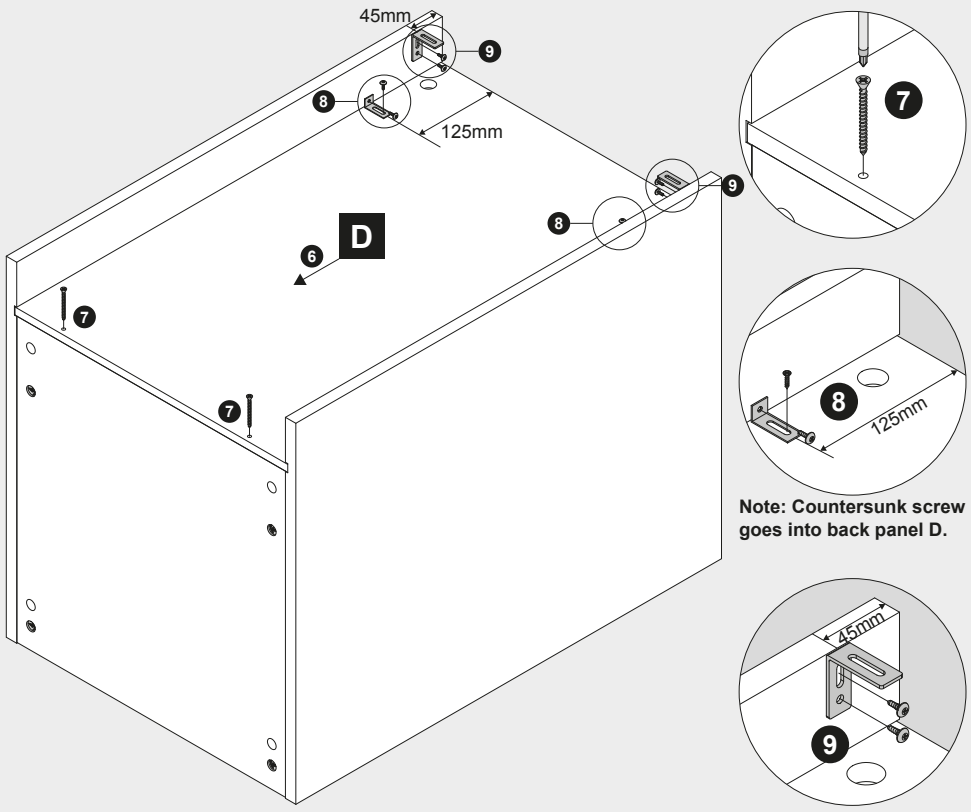


**7**

150199 2

**8**

150101 2

150202 2

154068 2

**9**

150202 4

154047 2

## 10 — 11

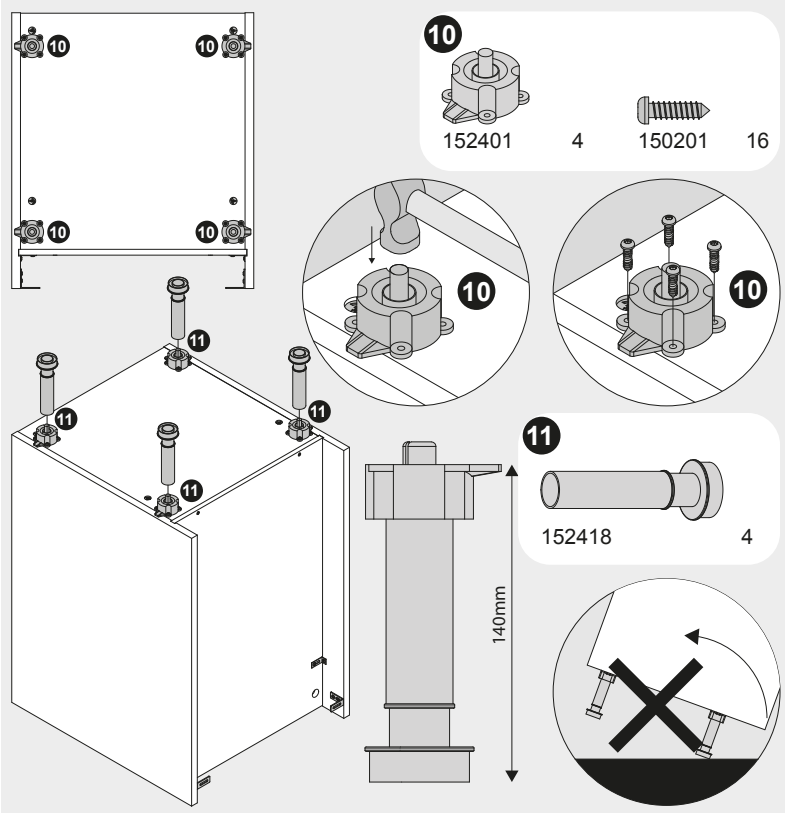


**10**

152401 4

150201 16

**11**

152418 4

## 12 — 14 Installation Instructions

**12**

150202 2

154068 2

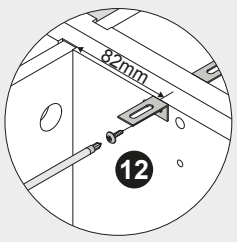


**TH** Modification required at this stage, see True Handleless guide for further details.

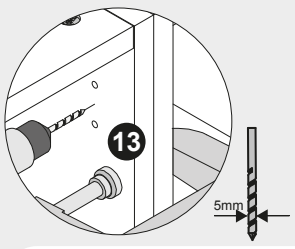


**13**

150308 2

150309 2

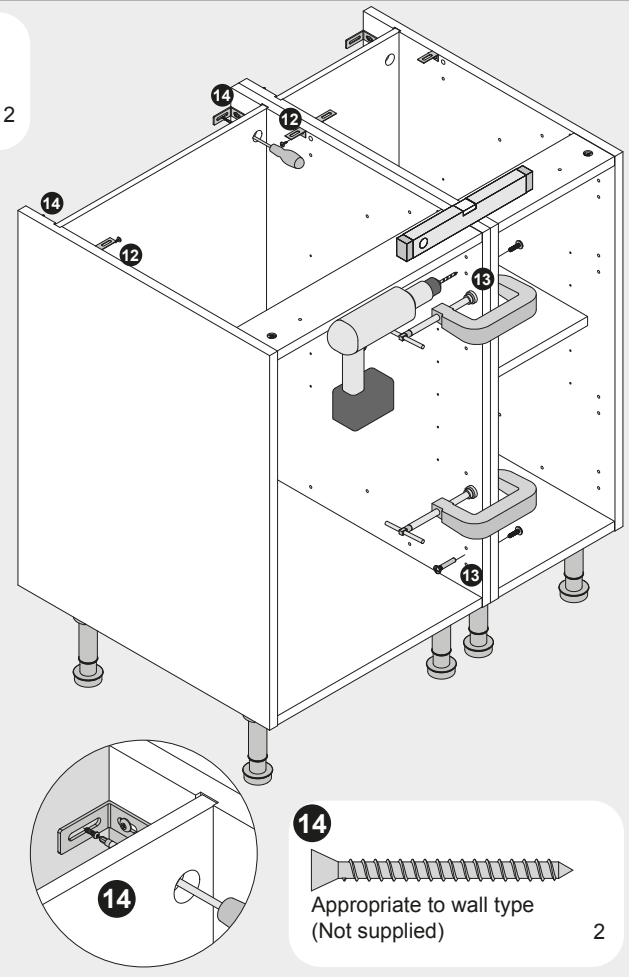

**14**

Appropriate to wall type (Not supplied) 2

## 15 — 18

**15**

151500 2

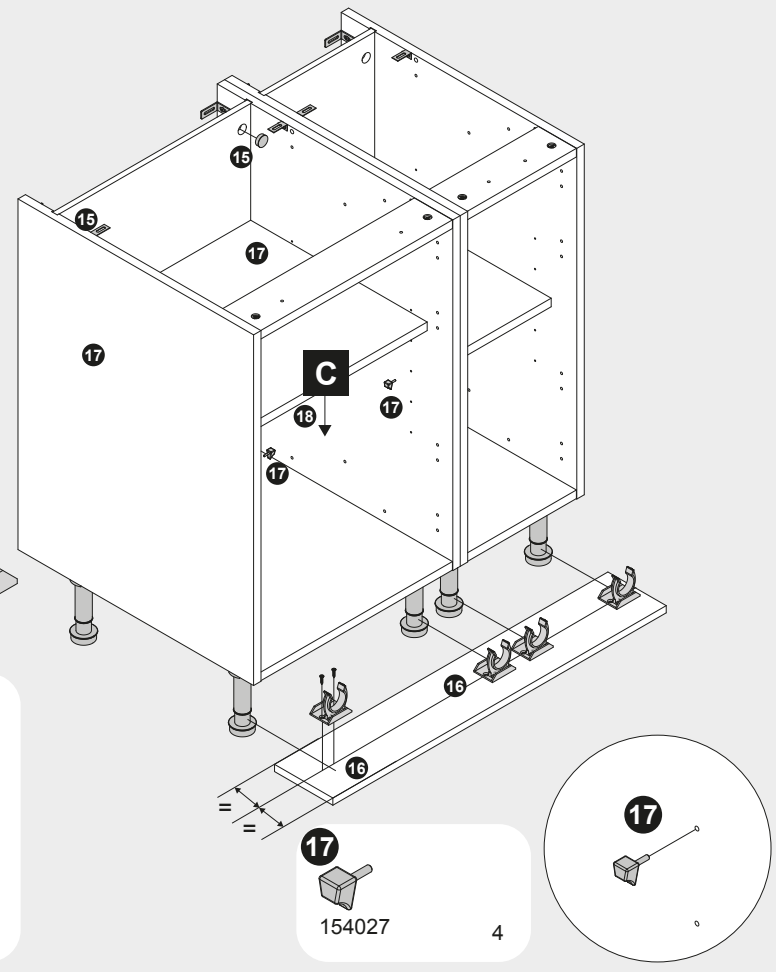


**16**

152402 2

150101 4

**17**

154027 4

## 19 — 20

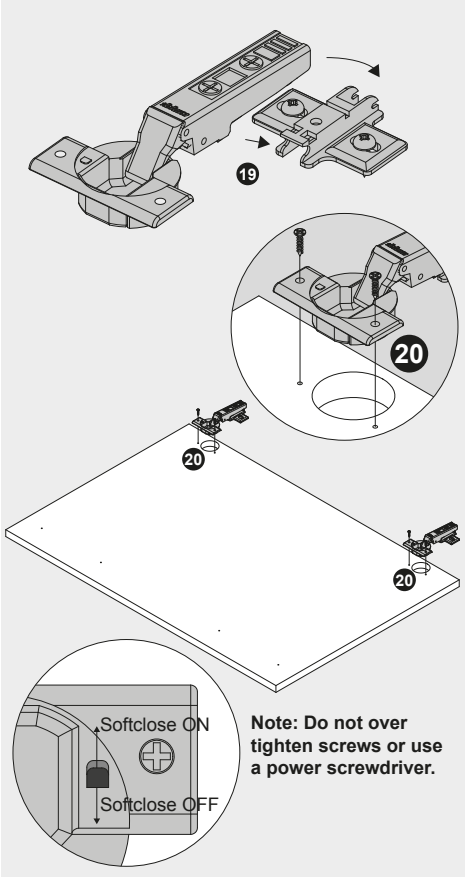


Note: Do not over tighten screws or use a power screwdriver.

**20**

150101 4

## 21 — 24

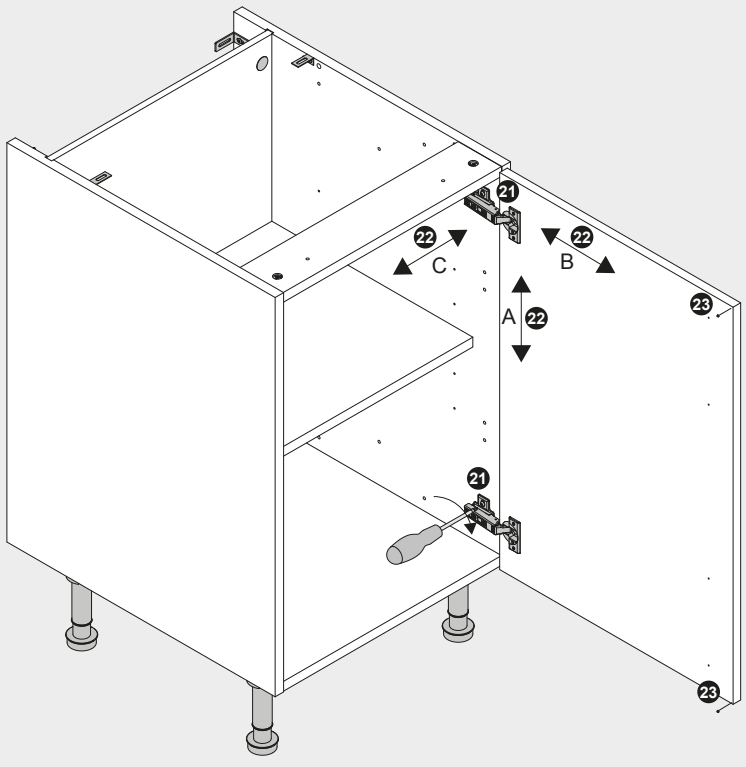


**23**

151999 2

**24**

152148 2

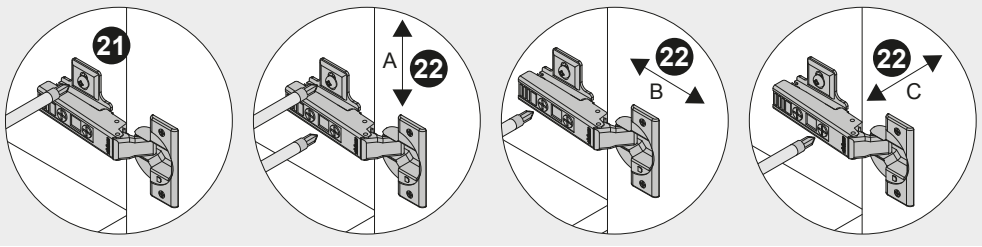


## 25 — 26 Fixed Fascia Fitting

**25**

150202 2

154068 2

151999 4

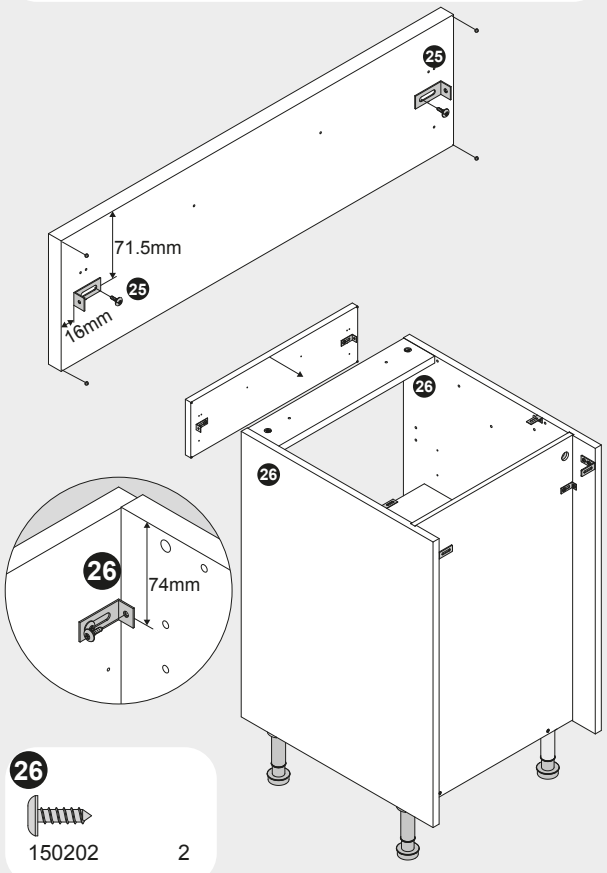


**26**

150202 2

Ref. 170800 (04)