300, 400, 450, 500, 600 Wall and 600 Corner Wall Unit Assembly

TH Note: If fitting a "True Handleless" kitchen, some components will differ to those shown in this instruction and will also be packaged separately. Please refer to your True Handleless guide to Receiving for further details on the different components and difference in installation.

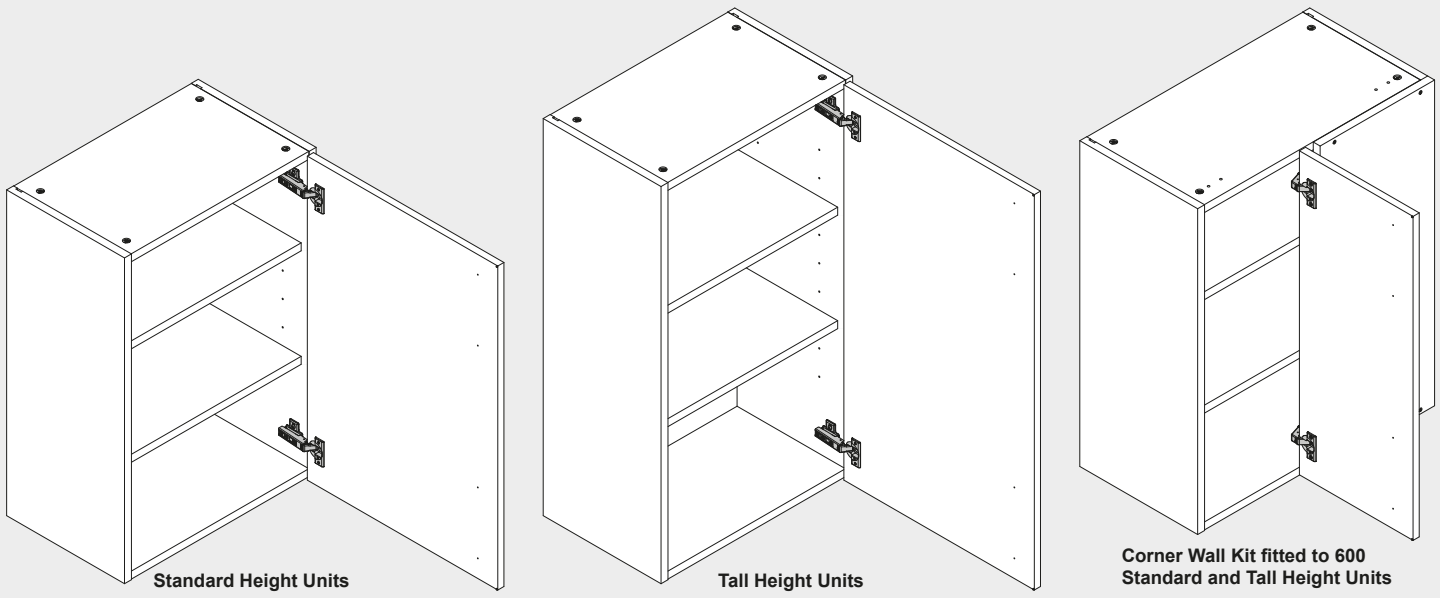

Standard Height Units

Tall Height Units

Corner Wall Kit fitted to 600 Standard and Tall Height Units

Components

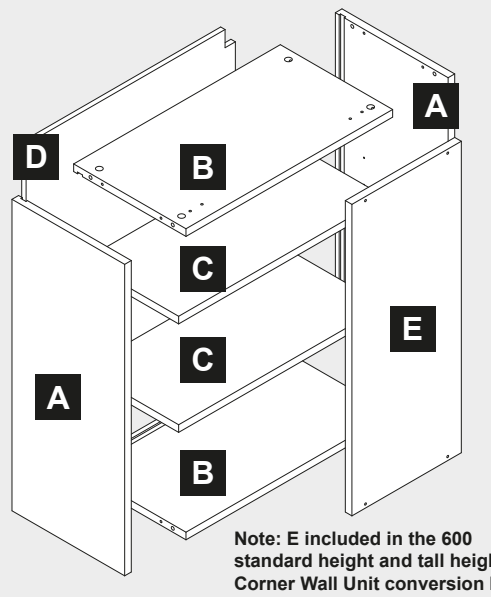

Note: E included in the 600 standard height and tall height Corner Wall Unit conversion kit.

Important Information - **True Handleless Kitchens Installers**: See Note Above TH

Caution: Some pieces of hardware could be hazardous to small children. Keep all these items out of reach and do not leave children unattended in the assembly area.
Please read these instructions carefully before proceeding. Refer to the Guide to Receiving and Installing your Kitchen booklet for further information.
Note: Due to variation in wall conditions no screws are supplied for fixing the units to the wall. If in doubt consult an expert. Assemble the unit on a clean solid work surface.
In the interest of continuing improvements we reserve the right to amend or adjust the specifications without prior notice. Errors and omissions excepted.
Every effort has been made to ensure that this product leaves the factory in perfect condition. In the unlikely event that an item is damaged or incorrect, please contact the customer services department.

bsi. ISO 9001 Quality Management
FM 665131

Note - Fitting Handles: (1) Decide where you are going to position each handle to maintain symmetry around your kitchen. (2) Measure the handle centres and mark off each door/drawer position. (3) Drill through the door/drawer using a fine drill (<2.5mm), then drill back from the rear face using a 4.5mm drill. (4) Attach with the fixings provided with your handle.

Ref. No.	Item	Quantity
150101	3.5x12mm	4
150126	4x30mm	4
154082		8
154085		8
154004		8
150308		2
150309		2
154027		8

Ref. No.	Item	Quantity
152181		2
152162		2
LH - 152246 RH - 152247		Pair
LH - 152248 RH - 152249		Pair
151999		2

Ref. No.	Item	Quantity
152201		2
152148		2
Note: The following are supplied in the 600 Corner Wall Unit conversion kit.		
150199	4.5x45mm	6
152108		2
152100		2

Tools Required

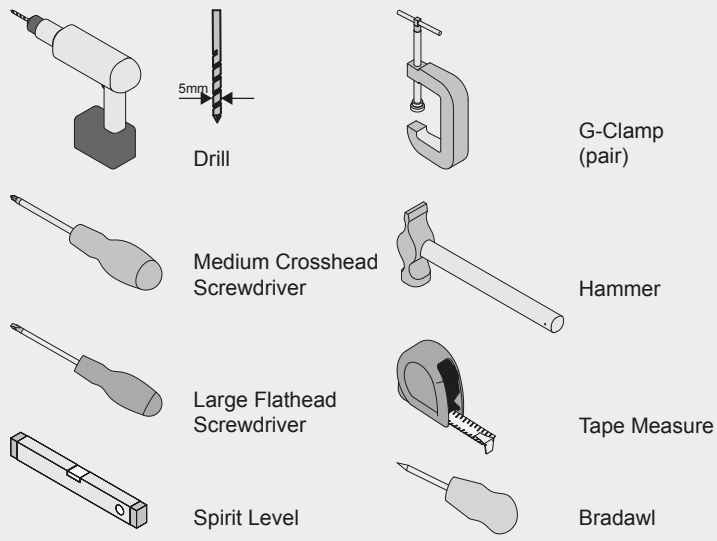

1 — 2 Assembly Instructions

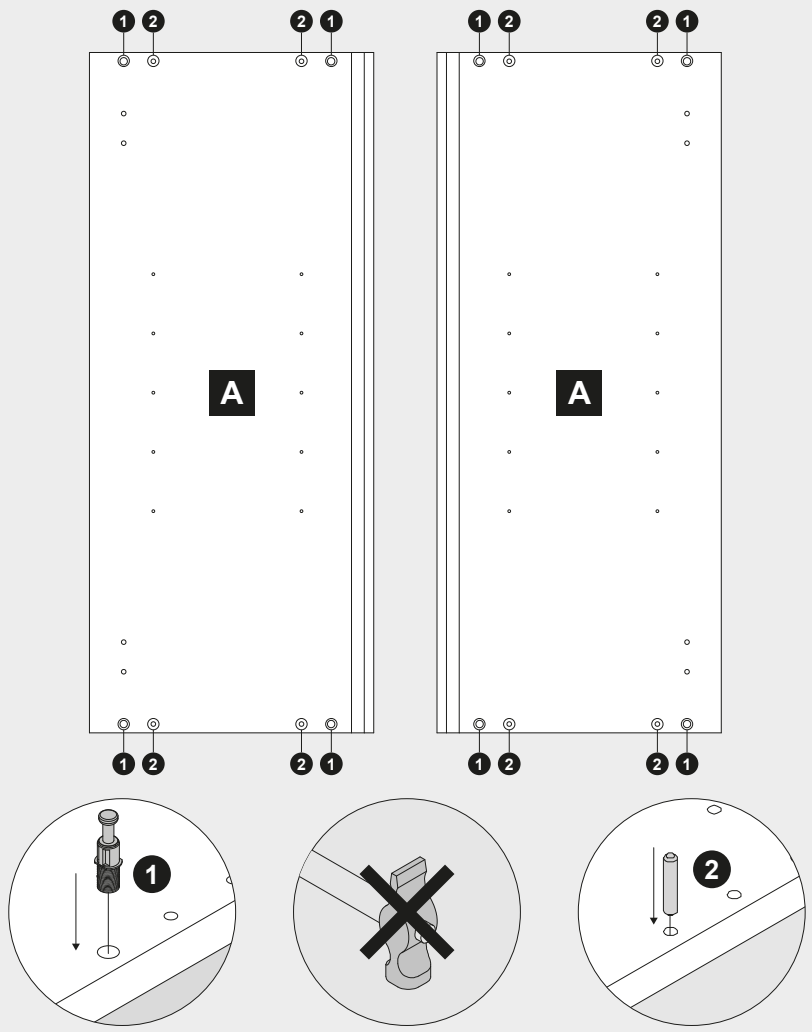

1
154082 8

2
154004 8

3

3
154083 8

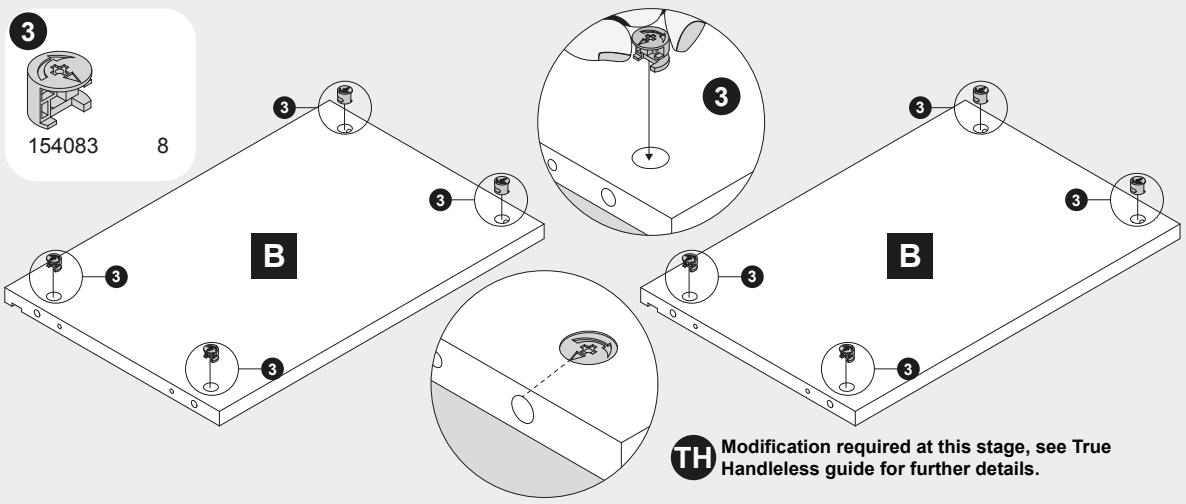

TH Modification required at this stage, see True Handleless guide for further details.

4 — 5

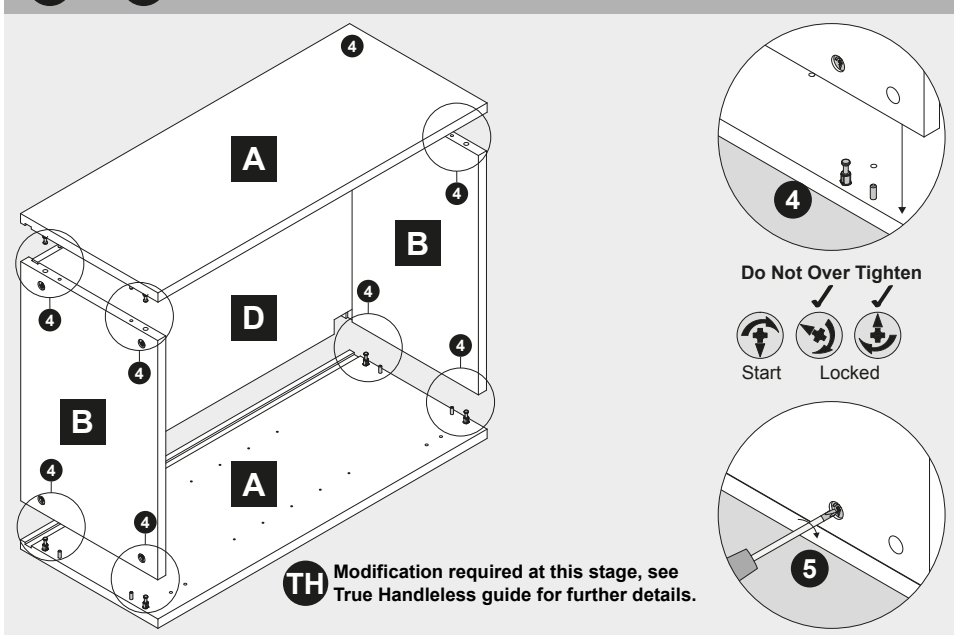

TH Modification required at this stage, see True Handleless guide for further details.

6

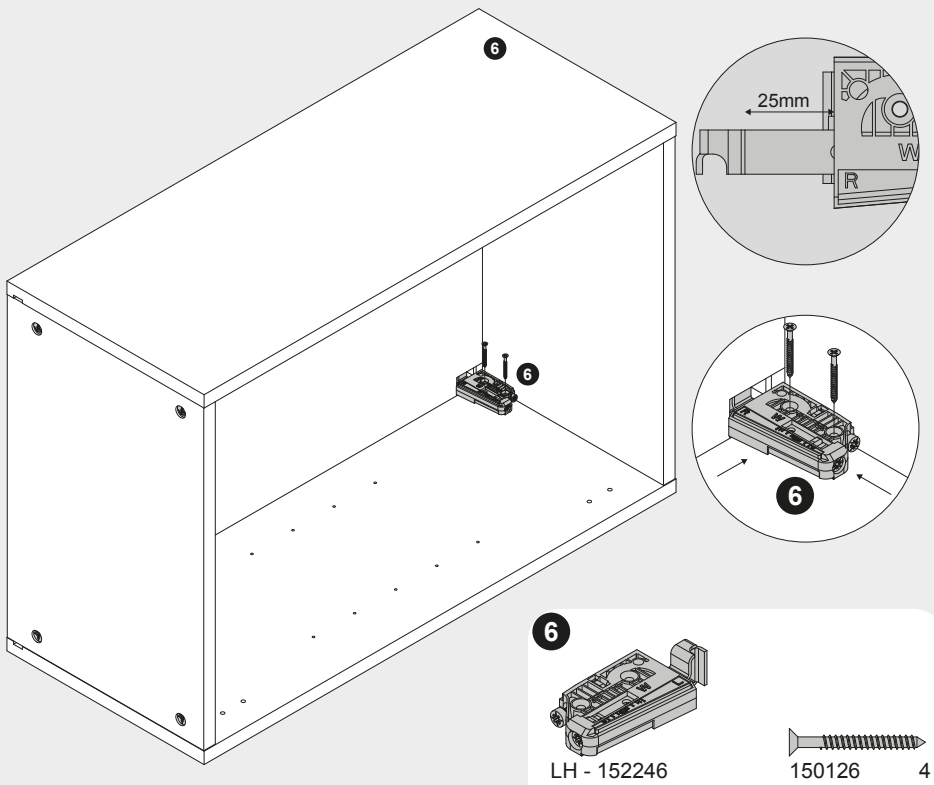

6

LH - 152246
RH - 152247 Pair

150126 4

7 — 9 Installation Instructions

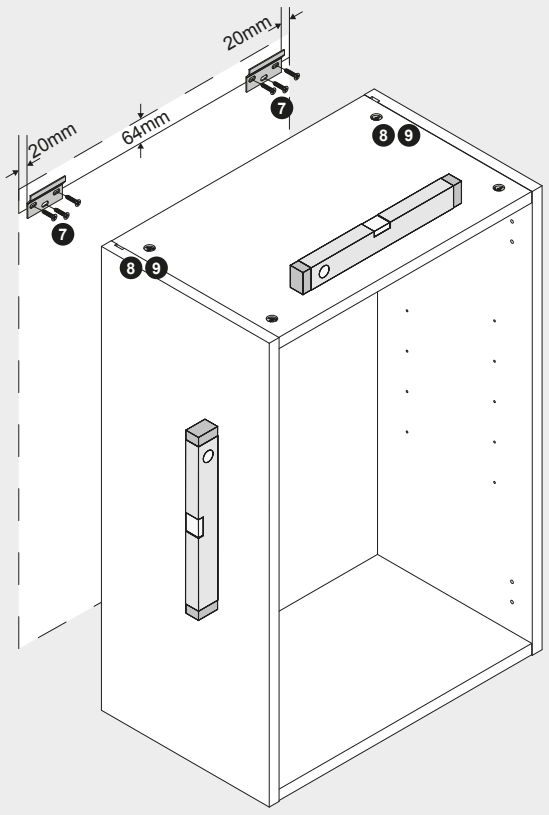

7

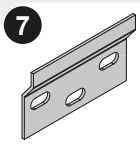

152201 2

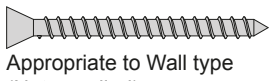

Appropriate to Wall type (Not supplied) 6

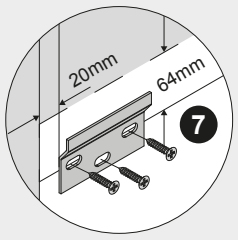

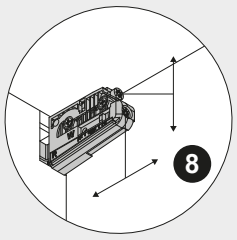

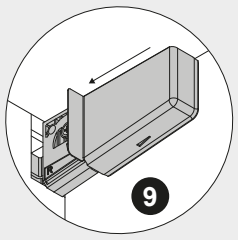

9

LH - 152248
RH - 152249 Pair

10

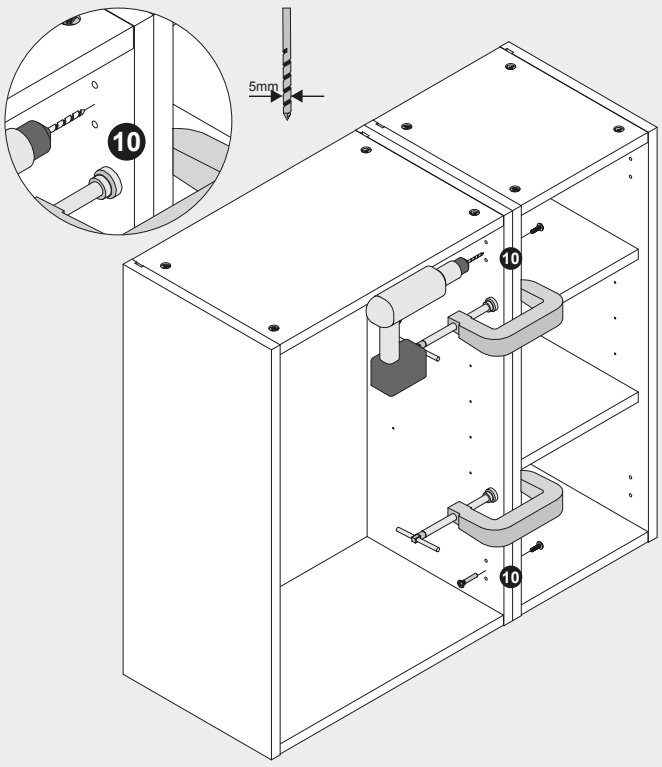

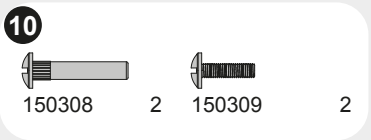

150308 2 150309 2

11 — 12

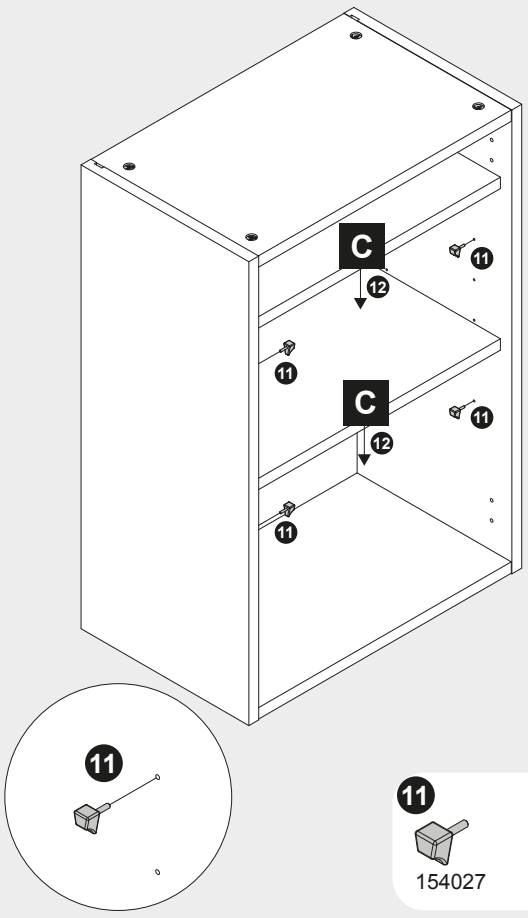

154027 8

13 — 14

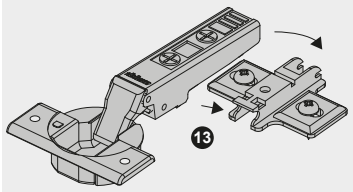

Note: Substitute hinges and plates if using 600 Corner Wall Unit conversion kit.

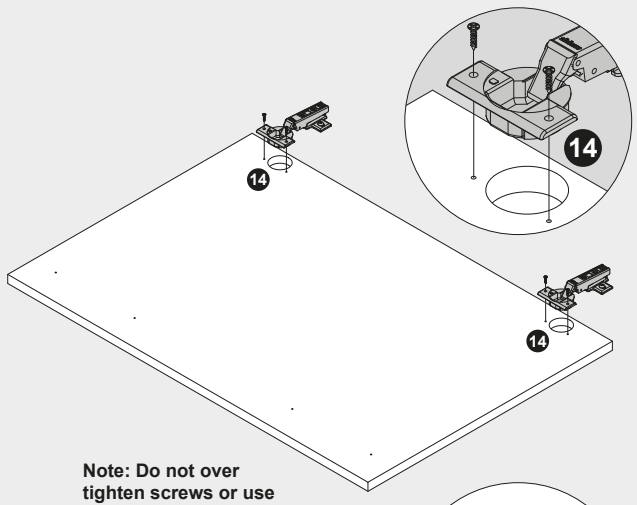

Note: Do not over tighten screws or use a power screwdriver.

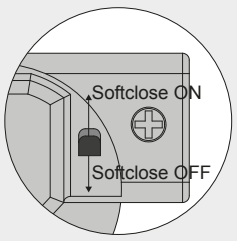

150101 8

15 — 18

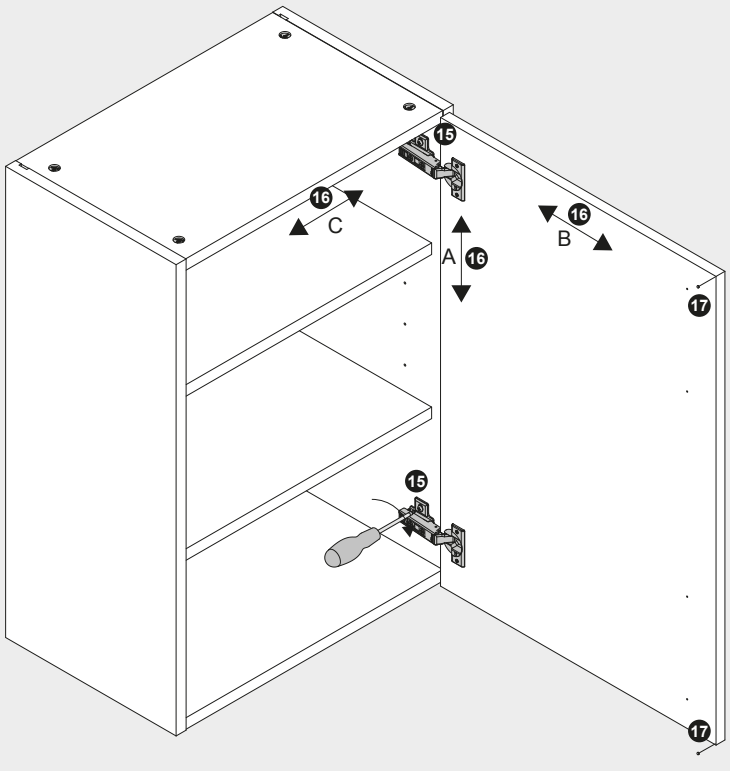

17

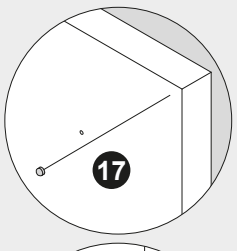

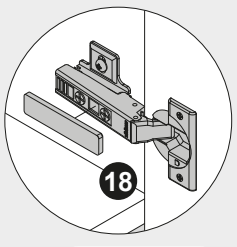

18

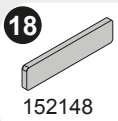

152148 2

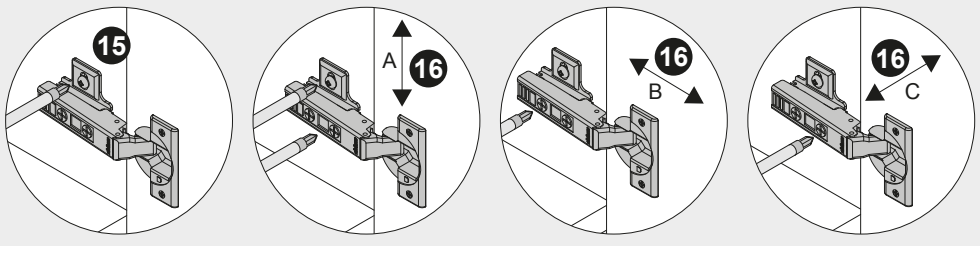

151999 2

19 Corner Wall Kit

TH Modification required at this stage, see True Handleless guide for further details.

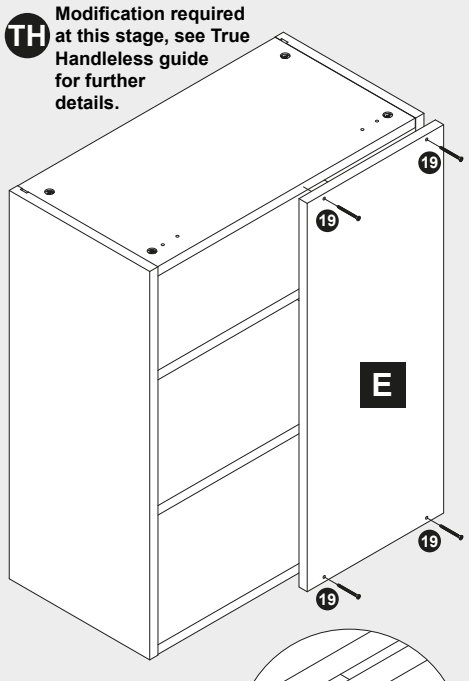

Note: It is advisable to fit the hinge plates to Panel E before panel E is fitted to the cabinet.

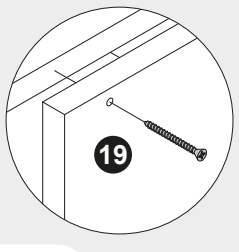

19

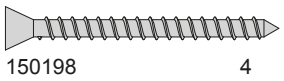

150198 4

20 Corner Wall Kit
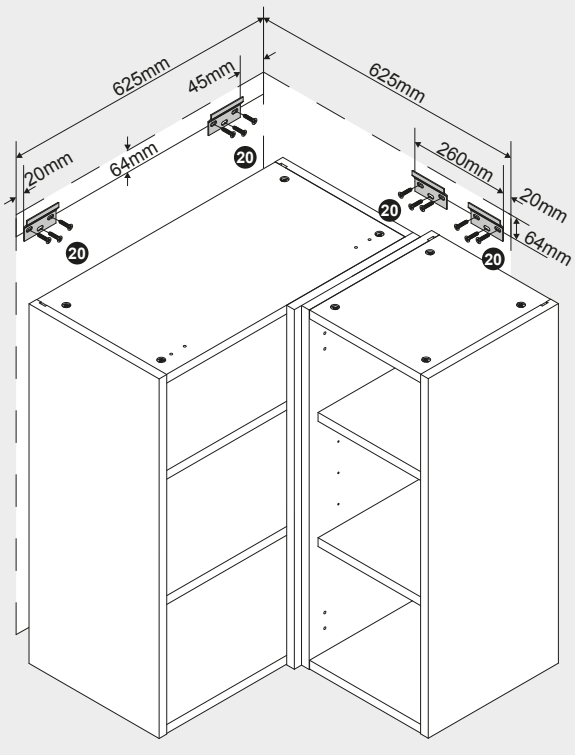
TH Modification required at this stage, see True Handleless guide for further details.