Washing Machine

Model: WW1*B*******

- Congratulations on your new Samsung washing machine. This manual contains important information on the installation, use, and care of your appliance. Read this manual thoroughly before using the washing machine to ensure that you know how to safely and efficiently operate the features and functions that your new washing machine offers.
- For detailed instructions on installation and cleaning of the washing machine and ecodesign information (according to (EU)2019/2023), visit the Samsung website (http://www.samsung.com), go to Support > Support home, and then enter the model name. Or, download and install the SmartThings app on your mobile device, and then open **HomeCare Wizard** in SmartThings for tips and guides.
- To check the product's model name, see the label enclosed with the product or attached to the product.

What's included

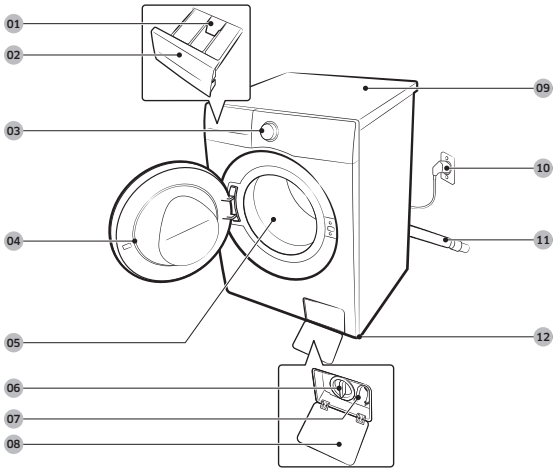

01 Release lever
02 Detergent drawer
03 Control panel
04 Door
05 Drum
06 Debris filter
07 Emergency drain tube
08 Filter cover
09 Worktop
10 Power plug
11 Drain hose
12 Levelling feet

Spanner

Bolt caps

Hose guide

Cold water hose

Hot water hose

Liquid detergent guide

Check valve (only supplied to some models)

Accessories (not supplied)

- Stacking kit : SKK-SS*
  - Staking kit is required to stack a dryer on a washing machine.

NOTE

- Spanner: For removing the shipping bolts and levelling the washing machine.
- Bolt caps: For covering the holes after removing the shipping bolts. The provided number of bolt caps (3 to 6) depends on the model.
- Hose guide: For hanging the drain hose in the drainpipe or wash-basin.
- Cold/Hot water hose: For supplying water to the washing machine. (Hot water hose is for applicable models only.)
- Liquid detergent guide: Insert it in the detergent compartment to use liquid detergent.

Safety information

Important safety symbols

What the icons and signs in this user manual mean:

⚠ WARNING

Hazards or unsafe practices that may result in **severe personal injury, death and/or property damage.**

⚠ CAUTION

Hazards or unsafe practices that may result in **personal injury and/or property damage.**

NOTE

Indicates that a risk of personal injury or material damage exists.

These warning signs are here to prevent injury to yourself and others.

Please follow them explicitly.

After reading this manual, store it in a safe place for future reference.

Read all the instructions before using the appliance.

As with any equipment that uses electricity and moving parts, potential hazards exist. To safely operate this appliance, familiarize yourself with its operation and exercise care when using it.

Important safety precautions

⚠ WARNING

To reduce the risk of fire, electric shock, or injury to persons when using your appliance, follow basic precautions, including the following:

1. This appliance is not to be used by persons (including children) with reduced physical, sensory or mental capabilities, or lack of experience and knowledge, unless they have been given supervision or instruction concerning use of the appliance by a person responsible for their safety.

B-PJT_WASHER-AD_SimpleUX_SG_DC68-04409S-00_EN.indd 2 2022-06-15 11:17:43

2. **For use in Europe**: This appliance can be used by children aged from 8 years and above and persons with reduced physical, sensory or mental capabilities or lack of experience and knowledge if they have been given supervision or instruction concerning use of the appliance in a safe way and understand the hazards involved. Children shall not play with the appliance. Cleaning and user maintenance shall not be made by children without supervision.
3. Children should be supervised to ensure that they do not play with the appliance.
4. **For use in Europe**: Children of less than 3 years should be kept away unless continuously supervised.
5. If the supply cord is damaged, it must be replaced by the manufacturer, its service agent or similarly qualified persons in order to avoid a hazard.
6. The new hose-sets supplied with the appliance are to be used and old hose-sets should not be reused.
7. For appliances with ventilation openings in the base, a carpet must not obstruct the openings.
8. **CAUTION**: In order to avoid a hazard due to inadvertent resetting of the thermal cut-out, this appliance must not be supplied through an external switching device, such as a timer, or connected to a circuit that is regularly switched on and off by the utility.
9. This appliance is intended to be used in household only and it is not intended to be used such as:
   - staff kitchen areas in shops, offices and other working environments;
   - farm houses;

B-PJT_WASHER-AD_SimpleUX_SG_DC68-04409S-00_EN.indd 3 2022-06-15 11:17:43

- by clients in hotels, motels and other residential type environments;
- bed and breakfast type environments; areas for communal use in blocks of flats or in launderettes.

Critical installation warnings

⚠ **WARNING**

The installation of this appliance must be performed by a qualified technician or service company.

- Failure to do so may result in electric shock, fire, an explosion, problems with the appliance, or injury.

The appliance is heavy, therefore take care when lifting it.

Plug the power cord firmly into a wall socket that meets local electrical specifications. Use the socket for this appliance only, and do not use an extension cord.

- Sharing a wall socket with other appliances using a power strip or extending the power cord may result in electric shock or fire.
- Ensure that the power voltage, frequency, and current are the same as those of the product specifications. Failure to do so may result in electric shock or fire.

Remove all foreign substances such as dust or water from the power plug terminals and contact points using a dry cloth on a regular basis.

- Unplug the power plug and clean it with a dry cloth.
- Failure to do so may result in electric shock or fire.

Plug the power plug into the wall socket so that the cord is running towards the floor.

- If you plug the power plug into the socket in the opposite direction, the electric wires within the cable may be damaged and this may result in electric shock or fire.

Keep all packaging materials out of the reach of children as these may be dangerous.

- If a child places a bag over its head, it may suffocate.

When the appliance, power plug or power cord is damaged, contact your nearest service centre.

This appliance must be properly grounded.

Do not ground the appliance to a gas pipe, plastic water pipe, or telephone line.

- This may result in electric shock, fire, an explosion, or problems with the appliance.
- Never plug the power cord into a socket that is not grounded correctly and make sure that it is in accordance with local and national regulations.

Do not install this appliance near a heater or any inflammable material.

Do not install this appliance in a humid, oily or dusty location, or in a location exposed to direct sunlight or water (rain drops).

Do not install this appliance in a location exposed to low temperatures.

- Frost may cause the tubes to burst.

Do not install this appliance in a location where gas may leak.

- This may result in electric shock or fire.

Do not use an electric transformer.

- This may result in electric shock or fire.

Do not use a damaged power plug, damaged power cord, or loose wall socket.

- This may result in electric shock or fire.

B-PJT_WASHER-AD_SimpleUX_SG_DC68-04409S-00_EN.indd 4 2022-06-15 11:17:43

Do not pull or excessively bend the power cord.

Do not twist or tie the power cord.

Do not hook the power cord over a metal object, place a heavy object on the power cord, insert the power cord between objects, or push the power cord into the space behind the appliance.

- This may result in electric shock or fire.

Do not pull the power cord when unplugging the power plug.

- Unplug the power plug by holding the plug.
- Failure to do so may result in electric shock or fire.

This appliance should be positioned so that the power plug, the water supply taps, and the drain pipes are accessible.

Following the repair by a non-authorized service provider, self-repair or non-professional repair of the product, Samsung is not liable for any damage to the product, any injury or any other product safety issue caused by any attempt to repair the product which does not carefully follow these repair and maintenance instructions. Any damage to the product caused by an attempt to repair the product by any person other than a Samsung certified service provider will not be covered by the warranty.

Installation cautions

⚠ **CAUTION**

This appliance should be positioned in such a way that the power plug is easily accessible.

- Failure to do so may result in electric shock or fire due to electric leakage.

Install your appliance on a solid, level floor that can support its weight.

- Failure to do so may result in abnormal vibrations, movement, noise, or problems with the appliance.

Critical usage warnings

⚠ **WARNING**

If the appliance is flooded, turn off the water & power supplies immediately and contact your nearest service centre.

- Do not touch the power plug with wet hands.
- Failure to do so may result in electric shock.

If the appliance generates a strange noise, a burning smell, or smoke, unplug the power cord immediately and contact your nearest service centre.

- Failure to do so may result in electric shock or fire.

In the event of a gas leak (such as propane gas, LP gas, etc.), ventilate immediately without touching the power plug. Do not touch the appliance or power cord.

- Do not use a ventilating fan.
- A spark may result in an explosion or fire.

Remove the washing machine door lever before disposing the appliance.

- If trapped inside the appliance, children may suffocate to death.

Make sure to remove the packaging (sponge, styrofoam) attached to the bottom of the washing machine before using it.

Do not wash items contaminated with gasoline, kerosene, benzene, paint thinner, alcohol or other inflammable or explosive substances.

- This may result in electric shock, fire, or an explosion.

B-PJT_WASHER-AD_SimpleUX_SG_DC68-04409S-00_EN.indd 5 2022-06-15 11:17:43

Do not open the washing machine door by force while it is operating (high-temperature washing/drying/spinning).

- Water flowing out of the washing machine may result in burns or cause the floor to be slippery. This may result in injury.
- Opening the door by force may result in damage to the appliance or injury.

Do not touch the power plug with wet hands.

- This may result in electric shock.

Do not turn the appliance off by unplugging the power cord while an operation is in progress.

- Plugging the power cord into the wall socket again may cause a spark and result in electric shock or fire.

Do not let children climb in or onto the appliance.

- This may result in electric shock, burns or injury.

Do not insert your hand or a metal object under the washing machine while it is operating.

- This may result in injury.

Do not unplug the appliance by pulling the power cord. Always grip the plug firmly and pull it straight out of the outlet.

- Damage to the power cord may cause a short-circuit, fire and/or electric shock.

Do not attempt to repair, disassemble, or modify the appliance yourself.

- Do not use a fuse (such as copper, steel wire, etc.) other than a standard fuse.
- When the appliance needs to be repaired or reinstalled, contact your nearest service centre.
- Failure to do so may result in electric shock, fire, problems with the appliance, or injury.

If the water supply hose comes loose from the water tap and floods the appliance, unplug the power cord.

- Failure to do so may result in electric shock or fire.

Unplug the power cord when the appliance is not being used for long periods of time or during a thunder or lightning storm.

- Failure to do so may result in electric shock or fire.

If any foreign substance enters into the appliance, unplug the power cord and contact your nearest Samsung Customer Service.

- This may result in electric shock or fire.

Do not let children (or pets) play in or on your washing machine. The washing machine door does not open easily from the inside and children may be seriously injured if trapped inside.

Usage cautions

⚠ **CAUTION**

When the washing machine is contaminated by a foreign substance such as detergent, dirt, food waste, etc., unplug the power cord and clean the washing machine using a damp, soft cloth.

- Failure to do so may result in discolouration, deformation, damage, or rust.

The front glass may be broken by a strong impact. Take care when using the washing machine.

- If the glass is broken, it may result in injury.

Open the water tap slowly after a long period of non-use, water supply failure, or when reconnecting the water supply hose.

- The air pressure in the water supply hose or the water pipe may damage a part of the appliance or result in a water leak.

If a draining error occurs during an operation, check if there is a draining problem.

- If the washing machine is used when it is flooded because of a draining problem, it may result in electric shock or fire.

B-PJT_WASHER-AD_SimpleUX_SG_DC68-04409S-00_EN.indd 6 2022-06-15 11:17:43

Insert the laundry into the washing machine completely so that the laundry does not get caught in the door.

- If laundry gets caught in the door, it may result in damage to the laundry or the washing machine, or result in a water leak.

Turn the water supply off when the washing machine is not being used.

- Ensure that the screws on the water supply hose connector are properly tightened.

Ensure that the rubber seal and front door glass are not contaminated by a foreign substance (e.g. waste, thread, hair, etc.).

- If a foreign substance is caught in the door or the door is not completely closed, it may cause a water leak.

Open the water tap and check if the water supply hose connector is firmly tightened and that there is no water leak before using the appliance.

- If the screws on the water supply hose connector are loose, it may result in a water leak.

The appliance you have purchased is designed for domestic use only.

Using the appliance for business purposes qualifies as an appliance misuse. In this case, the appliance will not be covered by the standard warranty provided by Samsung and no responsibility can be attributed to Samsung for malfunctions or damages resulting from such misuse.

Do not stand on the appliance or place objects (such as laundry, lighted candles, lighted cigarettes, dishes, chemicals, metal objects, etc.) on the appliance.

- This may result in electric shock, fire, problems with the appliance, or injury.

Do not spray volatile material such as insecticide onto the surface of the appliance.

- As well as being harmful to humans, this may result in electric shock, fire or problems with the appliance.

Do not place objects that generate electromagnetic fields near the washing machine.

- This may result in injury due to a malfunction.

Water drained during a high-temperature wash or drying cycle is hot. Do not touch the water.

- This may result in burns or injury.

Draining time may vary depending on the water temperature. If the water temperature is too high, the draining process starts after the water cools down.

Do not wash, spin, or dry water-proof seats, mats, or clothing (*) unless your appliance has a special cycle for washing these items.

(*): Woollen bedding, rain covers, fishing vests, ski pants, sleeping bags, diaper covers, sweat suits, and bicycle, motor cycle and car covers, etc.

- Do not wash thick or hard mats even if the washing machine mark is on the care label. This may result in injury or damage to the washing machine, walls, floor, or clothing due to abnormal vibrations.
- Do not wash throw rugs or doormats with rubber backing. The rubber backing may come off and stick to inside the drum, and this may result in malfunction such as a drainage error.

Do not operate the washing machine when the detergent drawer is removed.

- This may result in electric shock or injury due to a water leak.

Do not touch the insides of the drum during or just after drying as it is hot.

- This may result in burns.

The door glass becomes hot during washing and drying. Therefore, do not touch the door glass.

Also, do not allow children to play around the washing machine or touch the door glass.

- This may result in burns.

Do not insert your hand into the detergent drawer.

- This may result in injury as your hand may be caught by the detergent input device.

Remove the liquid detergent guide (applicable models only) when using powdered detergent.

- If not, water may leak through the front of the detergent drawer.

B-PJT_WASHER-AD_SimpleUX_SG_DC68-04409S-00_EN.indd 7 2022-06-15 11:17:43

Do not place any objects (such as shoes, food waste, animals) other than laundry into the washing machine.

- This may result in damage to the washing machine, or injury and death in the case of pets due to the abnormal vibrations.

Do not press the buttons using sharp objects such as pins, knifes, fingernails, etc.

- This may result in electric shock or injury.

Do not wash laundry contaminated by oils, creams or lotions usually found in skincare shops or massage clinics.

- This may cause the rubber seal to become deformed and result in a water leak.

Do not leave metal objects such as safety pins, hair pins or bleach in the drum for long periods of time.

- This may cause the drum to rust.
- If rust starts appearing on the surface of the drum, apply a (neutral) cleansing agent to the surface and use a sponge to clean it. Never use a metal brush.

Do not use dry cleaning detergent directly and do not wash, rinse, or spin laundry contaminated by dry cleaning detergent.

- This may result in spontaneous combustion or ignition due to the heat from the oxidation of the oil.

Do not use water from water cooling/heating devices.

- This may result in problems with the washing machine.

Do not use natural hand-washing soap for the washing machine.

- If it hardens and accumulates inside the washing machine, it may result in problems with the appliance, discolouration, rust, or bad odours.

Place socks and brassieres in a washing net and wash them with the other laundry.

Do not wash large laundry items such as bedding in the washing net.

- Failure to do so may result in injury due to abnormal vibrations.

Do not use hardened detergent.

- If it accumulates inside the washing machine, it may result in a water leak.

Make sure that the pockets of all the clothing items to be washed are empty.

- Hard, sharp objects such as coins, safety pins, nails, screws, or stones can cause extensive damage to the appliance.

Do not wash clothing with large buckles, buttons or other heavy metal objects.

Sort the laundry by colour on the basis of its colorfastness and select the recommended cycle, water temperature and additional functions.

- This may result in discolouration or fabric damage.

Take care that children’s fingers are not caught in the door when you close it.

- Failure to do so may result in injury.

To prevent odours and mould, leave the door open after a wash cycle to allow the drum to dry.

To prevent limescale build up, leave the detergent drawer open after a wash cycle and dry inside it.

B-PJT_WASHER-AD_SimpleUX_SG_DC68-04409S-00_EN.indd 8 2022-06-15 11:17:43

Critical cleaning warnings

⚠ **WARNING**

Do not clean the appliance by spraying water directly onto it.

Do not use a strong acidic cleaning agent.

Do not use benzene, thinner or alcohol to clean the appliance.

- This may result in discolouration, deformation, damage, electric shock or fire.

Before cleaning or performing maintenance, unplug the appliance from the wall socket.

- Failure to do so may result in electric shock or fire.

Declaration of conformity (for network models only)

- You may find the Open Source Announce information in the User Manual registered in the Samsung website.

Instructions about the WEEE

Correct Disposal of This Product (Waste Electrical & Electronic Equipment)

(Applicable in countries with separate collection systems)

This marking on the product, accessories or literature indicates that the product and its electronic accessories (e.g. charger, headset, USB cable) should not be disposed of with other household waste at the end of their working life. To prevent possible harm to the environment or human health from uncontrolled waste disposal, please separate these items from other types of waste and recycle them responsibly to promote the sustainable reuse of material resources.

Household users should contact either the retailer where they purchased this product, or their local government office, for details of where and how they can take these items for environmentally safe recycling.

Business users should contact their supplier and check the terms and conditions of the purchase contract. This product and its electronic accessories should not be mixed with other commercial wastes for disposal.

For information on Samsung's environmental commitments and product regulatory obligations, e.g. REACH, WEEE or Batteries, visit our sustainability page available via www.samsung.com

B-PJT_WASHER-AD_SimpleUX_SG_DC68-04409S-00_EN.indd 9 2022-06-15 11:17:43

Declaration of conformity

Hereby, Samsung declares that this radio equipment is in compliance with Directive 2014/53/EU and with the relevant statutory requirements in the UK. The full text of the EU declaration of conformity and the UK declaration of conformity is available at the following internet address: The official Declaration of conformity may be found at http://www.samsung.com, go to Support > Support home and enter the model name.

Wi-Fi max transmitter power : 20 dBm at 2.412 GHz – 2.472 GHz

Turning on Wi-Fi (for network models only)

Turning on Wi-Fi consumes more energy. Under an environment where Wi-Fi is frequently turned on, actual energy consumption can be greater than the values in the specification sheet section.

1. Tap and hold ⏻ to turn on the washing machine.
2. Tap and hold .
   - 2-1. The washing machine enters AP mode and connects to your smartphone.
   - 2-2. Tap to authenticate your washing machine.
   - 2-3. Once the authentication process is complete, your washing machine is successfully connected to the app.

NOTE

Tap and hold for 3 seconds to enter the **System Functions** menu, turn the Navigation dial to select Wi-Fi, and tap to turn it off.

B-PJT_WASHER-AD_SimpleUX_SG_DC68-04409S-00_EN.indd 10 2022-06-15 11:17:44

Installation

Follow these instructions carefully to ensure proper installation of the washing machine and prevent accidents when doing laundry.

Installation requirements

Electrical supply and grounding

Use an individual branch circuit specific to the washing machine.

To ensure proper grounding, the washing machine comes with a power cord featuring a three-prong grounding plug for use in a properly installed and grounded outlet.

Check with a qualified electrician or service person if you are not sure about the grounding.

Do not modify the provided plug. If it does not fit the outlet, call a qualified electrician to install a suitable outlet.

⚠ **WARNING**

- Do NOT use an extension cord.
- Use only the power cord that comes with the washing machine.
- Do NOT connect the ground wire to plastic plumbing, gas lines, or hot water pipes.
- Improperly connected grounding conductors may cause electric shock.

Water supply

The proper water pressure for this washing machine is between 50 kPa and 1000 kPa. Water pressure less than 50 kPa may cause the water valve to not close completely, or it may take longer to fill the drum, causing the washing machine to turn off. Water taps must be within 120 cm from the rear of the washing machine so that the provided inlet hoses reach the washing machine.

To reduce the risk of leaks:

- Make sure water taps are easily accessible.
- Turn off the taps when the washing machine is not in use.
- Check for any leaks at the water inlet hose fittings on a regular basis.

⚠ **CAUTION**

Before using the washing machine for the first time, check all connections at the water valve and taps for any leaks.

Drain

Samsung recommends a standpipe 60-90 cm high. The drain hose must be connected through the hose clip to the standpipe, and the standpipe must fully cover the drain hose.

B-PJT_WASHER-AD_SimpleUX_SG_DC68-04409S-00_EN.indd 11 2022-06-15 11:17:44

Flooring

For best performance, the washing machine must be installed on a solid floor. Wood floors may need to be reinforced to minimise vibration and/or unbalanced loads. Carpeting and soft tile surfaces do not resist vibrations well and may cause the washing machine to move slightly during the spin cycle.

⚠ CAUTION

Do NOT install the washing machine on a platform or a poorly supported structure.

Water temperature

Do not install the washing machine in areas where water may freeze as the washing machine always retains some water in its water valves, pumps, and/or hoses. Frozen water left in the connection parts may cause damage to belts, the pump, and other components of the washing machine.

Alcove installation

Minimum clearance for stable operation:

- Sides: 25 mm, Top: 25 mm, Rear: 50 mm, Front: 550 mm

If both the washing machine and a dryer are installed in the same location, the front of the alcove must have at least a 550 mm unobstructed air opening. Your washing machine alone does not require a specific air opening.

Step-by-step installation

NOTE

While unpacking the washing machine, lift the washing machine from the foam base. Make sure the drum support was removed from the bottom of the washing machine.

STEP 1 Select a location

Location requirements:

- Solid, level surface without carpeting or flooring that may obstruct ventilation
- Away from direct sunlight
- Adequate room for ventilation and wiring
- The ambient temperature is always higher than the freezing point (0 °C)
- Away from a heat source

NOTE

- To prevent excessive vibration while operating the washing machine, consider stability before anything else.
- Install your washing machine on a solid and level floor.
- Do not install your washing machine on soft floors or floor coverings.
- If you install your washing machine on a wood floor, install a water-resistance wooden panel (min 1.18 in. / 30 mm thick) to the floor. Also, when installing on wood floor we recommend installing your washing machine on the corner of the wood floor.

B-PJT_WASHER-AD_SimpleUX_SG_DC68-04409S-00_EN.indd 12 2022-06-15 11:17:44

STEP 2 Remove the shipping bolts

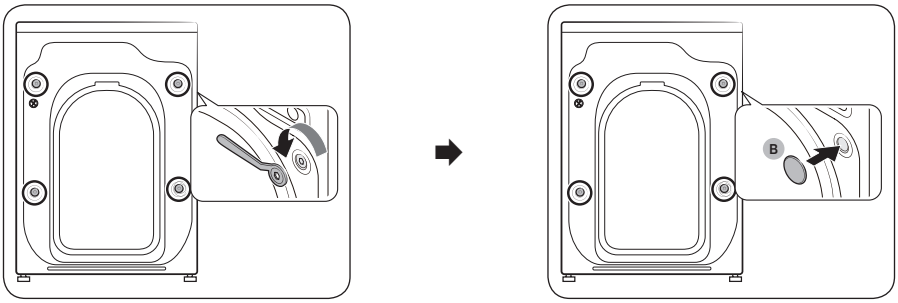

1. Unpack the product from the package and remove all shipping bolts.
2. Insert the **bolt caps (B)** into the holes (marked with circles in the figure).

NOTE

The number of shipping bolts may differ depending on the model.

WARNING

- To avoid injury, cover the holes with bolt caps after removing the shipping bolts. Do not move the washing machine without the shipping bolts in place. Assemble the shipping bolts before moving the washing machine to another location. Keep the shipping bolts in a safe place for future use.
- Packaging materials can be dangerous to children. Dispose all packaging material (plastic bags, polystyrene, etc.) out of children's reach.

STEP 3 Adjust the levelling feet

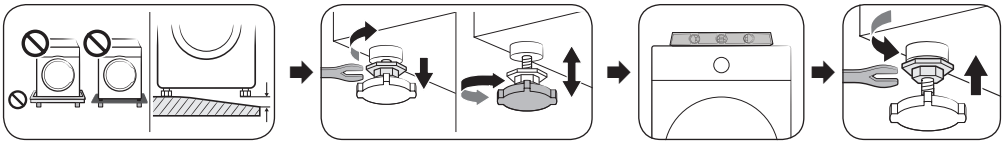

Adjust the levelling feet to level the washing machine. Once the washing machine is level, tighten the locking nuts with a spanner.

CAUTION

Make sure all the levelling feet are seating on the floor surface to avoid the washing machine from moving or generating noise due to vibration. Then, check if the washing machine is rocking. If the washing machine is not rocking, tighten the locking nuts.

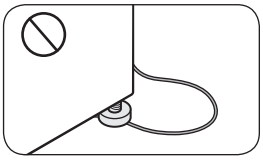

CAUTION

When installing the product make sure the levelling feet are not pressing the power cord.

B-PJT_WASHER-AD_SimpleUX_SG_DC68-04409S-00_EN.indd 13 2022-06-15 11:17:44

STEP 4 Connect the water hose

NOTE

These instructions are for the threaded water tap. For more detailed instructions or instructions for connecting the water hose to a non-threaded water tap, please visit the website on the cover of this manual and check the web manual.

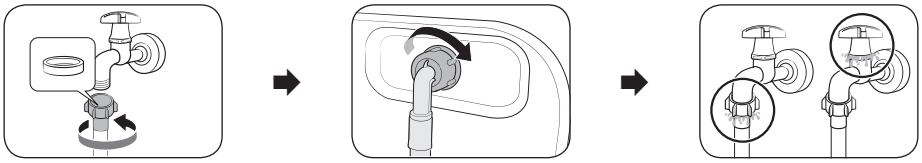

1. Connect the water hose to the water tap, and then turn it to the right to tighten.

CAUTION

Before connecting the water hose, make sure there is a rubber washer in the hose connectors. Do not use the hose if the washer is damaged or missing.

2. Connect the other end of the water hose to the inlet valve on the back of the washing machine, and then turn it to the right to tighten.
3. Slowly open the water tap and check if there are any leaks around the connection areas. If there are water leaks, repeat step 1 and 2.

WARNING

If there is a water leak, stop operating the washing machine and disconnect it from the electrical supply. Contact a local Samsung service centre in case of a leak from the water hose, or contact a plumbing technician in case of a leak from the water tap. Otherwise, this may cause electric shock.

CAUTION

Do not stretch the water hose by force. If the hose is too short, replace the hose with a longer, high-pressure hose.

STEP 5 Position the drain hose

The drain hose can be positioned in three ways:

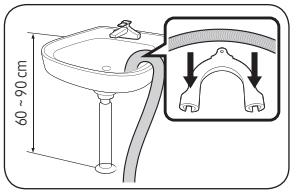

Over the edge of a wash basin

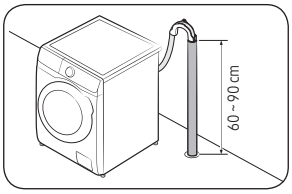

In a drain pipe

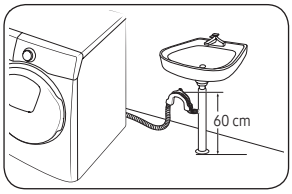

In a sink drain pipe branch

CAUTION

Remove the **lid** on the sink drain pipe branch before connecting the drain pipe to it.

B-PJT_WASHER-AD_SimpleUX_SG_DC68-04409S-00_EN.indd 14 2022-06-15 11:17:45

STEP 6 Power on

Plug the power cord into a wall socket protected by a fuse or circuit breaker. Then, tap and hold ⏻ for 3 seconds to turn on the washing machine.

NOTE

- Before doing your laundry for the first time, you must run a complete wash cycle without any items in the drum.
- If the display does not respond to control inputs. Remove the sticker.
- Make sure the laundry is fully inserted in the drum and not caught in the door.

Run Calibration

- Initial setup includes the calibration process which comes after the language selection. You must proceed calibration before using the washing machine.
- Empty the drum, and then tap ▷|| to start calibration.
- When calibration is complete, power turns off and then turns on automatically.
- If you want to proceed calibration again, tap and hold to enter the system function and select **Calibration**.

Auto dispenser

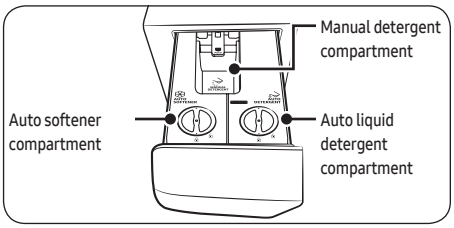

CAUTION

- Make sure to empty the detergent drawer before moving the washing machine.
- Do not add detergent to the drawer without the detergent and softener compartment.
- The washing machine stops operating if you open the detergent drawer while water is being supplied.

NOTE

- The "**Close dispenser**" message appears if the detergent drawer is not completely closed. Close the detergent drawer before you start the washing machine.
- If message "**Refill Auto detergent dispenser**", "**Refill Auto softener dispenser**", or "**Refill Auto detergent and softener dispensers**" appears on the display, refill the corresponding compartment. After adding detergent or softener, the refill alert will dismiss once the washer completes a cycle.
- Detergent/softener is not automatically dispensed in the Wool cycle. To dispense detergent/softener in the Wool cycle, you must manually set the input level of detergent/softener.
- It may be hard to open the detergent drawer with just your fingertips. Grab the detergent drawer handle firmly with your hand and pull to open it.
- Push the detergent drawer all the way to the end to close it. You will hear a click sound when the drawer is properly closed.
- Keep the door open so that inside the drum and detergent drawer can be well ventilated.
- Always keep the detergent drawer and the auto detergent/softener compartment covers closed except when adding detergent and/or softener. Air can enter all the way inside and can dry out the detergent and/or softener.
- Some detergent may leak from the detergent drawer while removing the drawer from the washing machine. This is normal.

B-PJT_WASHER-AD_SimpleUX_SG_DC68-04409S-00_EN.indd 15 2022-06-15 11:17:46

- Verify the detergent and softener compartment openings, turn the caps to open, and then fill with detergent and softener up to the MAX line.
- Do not use a mixture of a detergent and a softener.
- Always keep the detergent container with the cap closed.

Setting the amount of detergent/softener input

Follow these instructions to increase or decrease the amount of detergent/softener dispensed automatically.

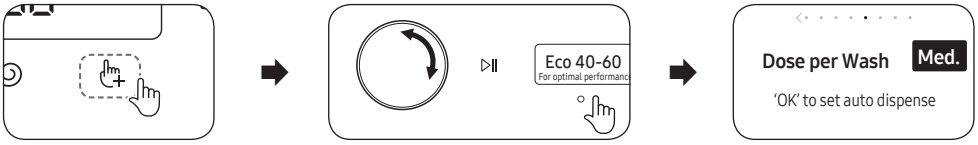

1. Tap ⊕.
2. Turn the **Navigation dial** to select **Dose Per Wash** or **Dose Per Rinse**.
   - **Dose Per Wash**: You can select the amount of detergent to input.
   - **Dose Per Rinse**: You can select the amount of softener to input.
3. Tap **O** to change the setting.
   - Default setting is **Med.**, and you can select from **Med.**, **High**, **Off**, or **Low**.

Setting the water hardness/softener concentration level

1. Tap and hold ⊕ for 3 seconds.
2. Turn the **Navigation dial** to select **Water hardness** or **Softener**.
3. Tap **O** to change the setting.
   - The default setting for **Water hardness** is **Med.** Changing the setting adjusts the amount of detergent dose.

Water hardness setting	Soft	Med.	Hard
Amount of detergent dose	Decreased	Normal	Increased

   - The default setting for **Softener** is **1x**. Changing the setting adjusts the amount of softener dose.

Softener setting	1x	2x	3x
Amount of softener dose	Normal	Decreased	Even more decreased

B-PJT_WASHER-AD_SimpleUX_SG_DC68-04409S-00_EN.indd 16 2022-06-15 11:17:46

Operations

For detailed information on using the washing machine, see the provided one-sheet manual. (Washing machine operation guide)

NOTE

The cycle and function names that appeared in this manual may differ from your product.

Cycle and Option list

Cycle

Eco 40-60	AI Wash	Cotton	15’ Quick Wash
Super Speed	Mixed Load	Intense Cold	Synthetics
Delicates	Towels	Bedding	Shirts
Hygiene Steam	Wool	Outdoor	Activewear
Colours	Denim	Baby Care	Silent Wash
Cloudy day	Rinse+Spin	Drain/Spin	Drum Clean+
Drum Clean			

- Drum Clean+/Drum Clean: applicable models only

  Do not use any cleaning agents for cleaning the drum. Chemical residue in the drum may cause damage to the laundry or the drum of the washing machine.
- Super Speed, Mixed Load, AI Wash: applicable models only

NOTE

The actual washing time may differ from the estimated time initially displayed on the control panel upon cycle selection.

B-PJT_WASHER-AD_SimpleUX_SG_DC68-04409S-00_EN.indd 17 2022-06-15 11:17:46

Options

Tap to select from the following options.

Prewash	Intensive	Bubble Soak	Dose per Wash
Dose per Rinse	My Cycles	Delay End	Child lock

- **Child Lock**: Tap O to lock all the buttons except the button.
- **Delay End**: You can set the washing machine to finish your wash automatically at a later time, choosing a delay of between 1 to 24 hours (in 1 hour or 10 minutes increments). The hour displayed indicates the time the wash will finish.

Settings

Tap and hold for 3 seconds to enter the **Settings** menu to change the following options.

Water Hardness	Softener	Auto Softener	Clean Detergent Pump
Clean Softener Pump	AI Pattern	Sound	Calibration
Wi-Fi	Language	Factory Reset	

- **Sound**: You can turn on or off the sound from the washer.
- **Smart Control**: Turn on Smart Control to enable control of your appliance.

Quick Drive (WW**B*9***** model only)

You can reduce the overall washing time of the selected cycle settings. Quick Drive may not be available for certain cycles.

B-PJT_WASHER-AD_SimpleUX_SG_DC68-04409S-00_EN.indd 18 2022-06-15 11:17:46

SmartThings

Wi-Fi connection

On your smartphone or tablet, go to **Settings** and turn on the wireless connection and select an AP (Access Point).

- This appliance supports the Wi-Fi 2.4 GHz protocols.

Download

On an app market (Google Play Store, Apple App Store, Samsung Galaxy Apps), find the SmartThings app with a search term of “SmartThings”. Download and install the app on your device.

NOTE

The app is subject to change without notice for improved performance.

Log in

You must first log into SmartThings with your Samsung account. To create a new Samsung account, follow the instructions on the app. You don’t need a separate app to create your account.

NOTE

If you have a Samsung account, use the account to log in. A registered Samsung smartphone or tablet user automatically logs in.

To register your appliance to SmartThings

1. Make sure your smartphone or tablet is connected to a wireless network. If not, go to **Settings** and turn on the wireless connection and select an AP (Access Point).
2. Open **SmartThings** on your smartphone or tablet.
3. If a message of “A new device is found.”, select **Add**.
4. If no message appears, select **+** and select your appliance in a list of devices available. If your appliance is not listed, select **Device Type** > **Specific Device Model**, and then add your appliance manually.
5. Register your appliance to the SmartThings app as follows.
   a. Add your appliance to SmartThings. Make sure your appliance is connected to SmartThings.
   b. When registration is complete, your appliance appears on your smartphone or tablet.

Smart Control

After connecting your product to SmartThings, you can control your appliance remotely.

After you have loaded the laundry and closed the door. Tap **Smart Control** and conveniently control your washing machine, adding rinse, spin or dry cycles using the SmartThings app.

B-PJT_WASHER-AD_SimpleUX_SG_DC68-04409S-00_EN.indd 19 2022-06-15 11:17:46

Maintenance

For instructions on cleaning the washing machine, please visit the website on the cover of this manual and check the web manual.

Cleaning

Detergent drawer

1. While holding down the release lever on the inner of the drawer, pull the detergent drawer to remove.
2. Open the cover and clean inside the auto detergent/softener compartments with water.
   - Wipe the water and close the covers when you finish cleaning them.
3. Clean the drawer recess using a bottle brush to remove detergent residues and limescale on the drawer recess.
4. Insert the detergent drawer back into the washing machine.

Emergency drain

In case of a power failure, drain the water inside the drum before taking out the laundry.

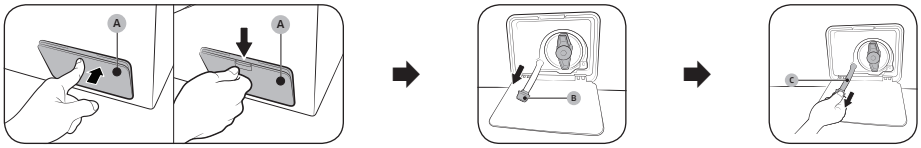

1. Power off and unplug the washing machine from the electrical outlet.
2. Open the **filter cover (A)**.
   - TYPE 1: Gently press the top area of the **filter cover (A)** to open.
   - TYPE 2: Push down the latch of the **filter cover (A)** to open.
3. Put an empty, spacious container around the cover, and stretch the emergency drain tube to the container while holding the **tube cap (B)**.
4. Open the tube cap and let water in the **emergency drain tube (C)** flow into the container.
5. When done, close the tube cap, and reinsert the tube. Then, close the filter cover.

NOTE

Use a spacious container because the water in the drum may be more than expected.

B-PJT_WASHER-AD_SimpleUX_SG_DC68-04409S-00_EN.indd 20 2022-06-15 11:17:47

Debris filter

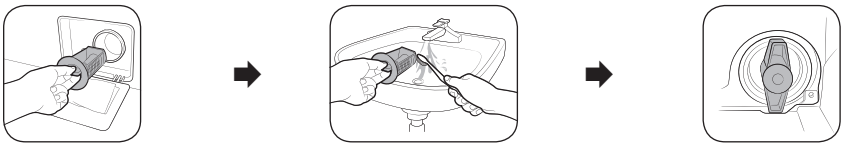

1. Turn off the washing machine, and unplug the power cord.
2. Drain the remaining water inside the drum. (For details, refer to the **Emergency drain** section.)
3. Open the **filter cover**.
   - TYPE 1: Gently press the top area of the **filter cover** to open.
   - TYPE 2: Push down the latch of the **filter cover** to open.
4. Turn the debris filter knob to the left, and drain off the remaining water.
5. Clean the debris filter using a soft brush. Make sure the drain pump propeller inside the filter is unclogged.
6. Reinsert the debris filter, and turn the filter knob to the right.

B-PJT_WASHER-AD_SimpleUX_SG_DC68-04409S-00_EN.indd 21 2022-06-15 11:17:47

Troubleshooting

If there is any problem, check the information message on the LCD screen and follow the on-screen instructions.
If the problem persists, please contact the service center.

Checkpoints

If you encounter a problem with the washing machine, first check the table below and try these suggestions.

Problem	Action
Does not start.	• Make sure the washing machine is plugged in. • Make sure the door is properly closed. • Make sure the water taps are open. • Tap ▷‖ to start the washing machine. • Make sure Child Lock is not activated. • Before the washing machine starts to fill, it will make a series of clicking noises to check the door lock and will do quick drain. • Check the fuse or reset the circuit breaker. • Check if power is supplied properly. • Low voltage detected. - Check if the power cord is plugged in. • Make sure laundry is not caught in the door.
Water supply is insufficient, or no water is supplied.	• Fully open the water tap. • Make sure the door is properly closed. • Make sure the water supply hose is not frozen. • Make sure the water supply hose is not kinked or clogged. • Make sure there is sufficient water pressure. • Make sure that the cold water tap and the hot water tap are properly connected. • Clean the mesh filter as it may be clogged.
After a cycle, detergent remains in the detergent drawer.	• Make sure the washing machine is running with sufficient water pressure. • Make sure the detergent is added to the centre of the detergent drawer. • Make sure the rinse cap is inserted properly. • If using granular detergent, make sure the detergent selector is in the upper position. • Remove the rinse cap and clean the detergent drawer.

B-PJT_WASHER-AD_SimpleUX_SG_DC68-04409S-00_EN.indd 22 2022-06-15 11:17:47

Problem	Action
Excessive vibrations or makes noise.	• Make sure the washing machine is installed on a level, solid floor that is not slippery. If the floor is not level, use the levelling feet to adjust the height of the washing machine. • Make sure the shipping bolts are removed. • Make sure the washing machine is not in contact with any other object. • Make sure the laundry load is balanced. • The motor can cause noise during normal operation. • Overalls or clothes with metallic decorations can cause noise while being washed. This is normal. • Metal objects such as coins can cause noise. After washing, remove these objects from the drum or filter case. • Redistribute the load. If only one item of clothing needs washing, such as a bathrobe or pair of jeans, the final spin result might be unsatisfactory, and a “Ub” check message will be shown in the display.
Does not drain and/ or spin.	• Make sure the drain hose is straightened all the way to the drain system. If you encounter a drain problem, call for service. • Make sure the debris filter is not clogged. • Close the door and tap ▷‖. For your safety, the washing machine will not tumble or spin unless the door is closed. • Make sure the drain hose is not frozen or clogged. • Make sure the drain hose is connected to a drain system that is not clogged. • If the washing machine is not supplied with sufficient power, the washing machine will temporarily not drain or spin. As soon as the washing machine regains sufficient power, it will operate normally. • Make sure the drain hose is positioned correctly, depending on the connection type. • Clean the debris filter as it may be clogged.
The door does not open.	• Tap ▷‖ to stop the washing machine. • It may take a few moments for the door lock mechanism to disengage. • The door will not open until 3 minutes after the washing machine has stopped or the power has been off. • Make sure all the water in the drum is drained. • The door may not open if water remains in the drum. Drain the drum and open the door manually. • Make sure the door lock light is off. The door lock light turns off after the washing machine has drained.
Excessive suds.	• Make sure you use the recommended types of detergent as appropriate. • Use high efficiency (HE) detergent to prevent oversudsing. • Reduce the detergent amount for soft water, small loads, or lightly soiled loads. • Non-HE detergent is not recommended.
Cannot add additional detergent.	• Make sure the remaining amount of detergent and fabric softener is not over the limit.

B-PJT_WASHER-AD_SimpleUX_SG_DC68-04409S-00_EN.indd 23 2022-06-15 11:17:47

Problem	Action
Stops.	• Plug the power cord into a live electrical outlet. • Check the fuse or reset the circuit breaker. • Close the door and tap ▷‖ to start the washing machine. For your safety, the washing machine will not tumble or spin unless the door is closed. • Before the washing machine starts to fill, it will make a series of clicking noises to check the door lock and will do quick drain. • There may be a pause or soak period in the cycle. Wait briefly, and the washing machine may start. • Make sure the mesh filter of the water supply hose at the water taps is not clogged. Periodically clean the mesh filter. • If the washing machine is not supplied with sufficient power, the washing machine will temporarily not drain or spin. As soon as the washing machine regains sufficient power, it will operate normally.
Fills with the wrong water temperature.	• Fully open both taps. • Make sure the temperature selection is correct. • Make sure the hoses are connected to the correct taps. Flush water lines. • Make sure the water heater is set to supply a minimum of 49 °C hot water at the tap. Also, check the water heater capacity and recovery rate. • Disconnect the hoses and clean the mesh filter. The mesh filter may be clogged. • While the washing machine fills, the water temperature may change as the automatic temperature control feature checks incoming water temperature. This is normal. • While the washing machine fills, you may notice just hot and/or just cold water going through the dispenser when cold or warm temperatures are selected. This is a normal function of the automatic temperature control feature as the washing machine determines the water temperature.
Load is wet at the end of a cycle.	• Use the High or Extra High spin speed. • Use high efficiency (HE) detergent to reduce oversudsing. • Load is too small. Small loads (one or two items) may become unbalanced and not spin completely. • Make sure the drain hose is not kinked or clogged.

B-PJT_WASHER-AD_SimpleUX_SG_DC68-04409S-00_EN.indd 24 2022-06-15 11:17:47

Problem	Action
Leaks water.	• Make sure the door is properly closed. • Make sure all hose connections are tight. • Make sure the end of the drain hose is correctly inserted and secured to the drain system. • Avoid overloading. • Use high efficiency (HE) detergent to prevent oversudsing. • Check the drain hose. - Make sure the end of the drain hose is not placed on the floor. - Make sure the drain hose is not clogged. • Check if there is something stuck between the door and the diaphragm. - If there is something stuck between the door and the diaphragm, it may cause a leak or damage to the diaphragm.
Has odours.	• Excessive suds collect in recesses and can cause foul odours. • Run cleansing cycles to sanitise periodically. • Clean the door seal (diaphragm). • Dry the washing machine interior after a cycle has finished.
No bubbles are seen (Bubble models only).	• You may not be able to see bubbles if there is too much items in the drum. • Severely contaminated laundry may not generate bubbles.
A message appears on the display to alert that dispenser is open.	• Check if the detergent drawer is closed properly. - Open the detergent drawer and close it again. Make sure it's closed properly.
Increased time of washing	• The actual washing time may differ from the estimated time initially displayed on the control panel upon cycle selection.

- If a problem persists, contact a service center. The number of the service center is on the label attached to the product.
- Samsung is not liable for any damage to the product, any injury, or any other product safety issue caused by a repair which does not follow the instructions in these Repair Guides. Any damage to the product caused by an attempted repair (by anyone other than a Samsung certified service provider) will also not be covered by the warranty.

⚠ **CAUTION**

Defrosting your washing machine

The washing machine may freeze when it drops below 0 °C.

1. Turn off the washing machine, and unplug the power cord.
2. Pour warm water over the water tap to loosen the water hose.
3. Disconnect the water hose, and soak it in warm water.
4. Pour warm water into the drum and leave it for about 10 minutes.
5. Reconnect the water hose to the water tap.

B-PJT_WASHER-AD_SimpleUX_SG_DC68-04409S-00_EN.indd 25 2022-06-15 11:17:47

Specifications

Protecting the environment

- This appliance is manufactured from recyclable materials. If you decide to dispose of this appliance, please observe local waste disposal regulations. Cut off the power cord so that the appliance cannot be connected to a power source. Remove the door so that animals and small children cannot get trapped inside the appliance.
- Do not exceed the detergent quantities recommended in the detergent manufacturer's instructions.
- Use stain removal products and bleaches before the wash cycle only when strictly necessary.
- Save water and electricity by only washing full loads (the exact amount depends upon the cycle used).

Standby power consumption

Power consumption	Off mode	0.50 W
	Network standby mode	2.00 W
	Time in networked standby mode (WI-FI)	10 min

B-PJT_WASHER-AD_SimpleUX_SG_DC68-04409S-00_EN.indd 26 2022-06-15 11:17:47

Specification sheet

"*" Asterisk(s) means variant model and can be varied (0-9) or (A-Z).

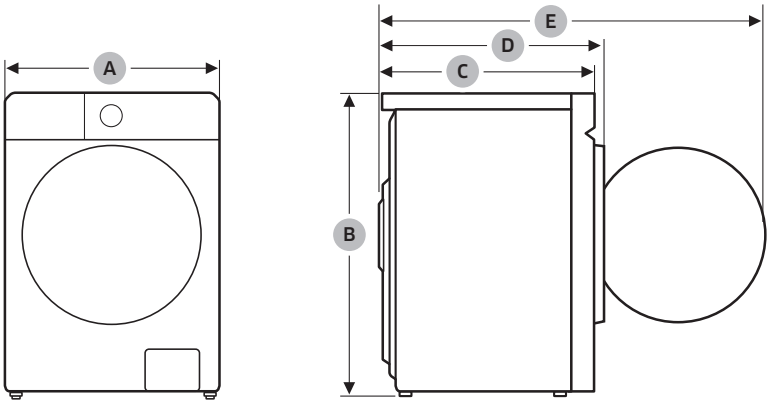

Type			Front loading washing machine
Model name			WW1*B*******
Dimensions	A (Width)		600 mm
	B (Height)		850 mm
	C (Depth)		600 mm
	D (Depth+Door frame thickness)		630 mm
	E		1080 mm
Water pressure			50-800 kPa
Net weight			73.0 kg (WW**BB****G*) 72.0 kg (WW**BB****T*, WW**BB****A*)
Maximum load capacity		Washing and spinning	11.0 kg
Power consumption	Washing and heating	AC 220-240 V / 50 Hz	1900-2300 W
Spin revolutions			1400 rpm

NOTE

- The design and specifications are subject to change without notice for quality improvement purposes.
- The dimensions stated here may differ slightly from the actual measurements depending on the measuring method.

B-PJT_WASHER-AD_SimpleUX_SG_DC68-04409S-00_EN.indd 27 2022-06-15 11:17:48

SAMSUNG

DC68-04409S-00