Heat Pump Dryer

Models: DV9*BB******

- Congratulations on your new Samsung dryer. This manual contains important information on the installation, use, and care of your appliance. Please take some time to read this manual to take full advantage of your dryer's many benefits and features.
- For detailed instructions on installation and cleaning of the dryer, visit the Samsung website (http://www.samsung.com), go to Support > Support Home, and then enter the model name.
- To check the product's model name, see the label enclosed with the product or attached to the product.

What's included

Carefully unpack the dryer. Keep all packaging materials away from children. The parts and location of parts shown below may differ from your dryer. Before installation, make sure the dryer has all the parts listed here. If the dryer and/or parts are damaged or missing, contact the nearest Samsung customer service center.

Dryer at a glance

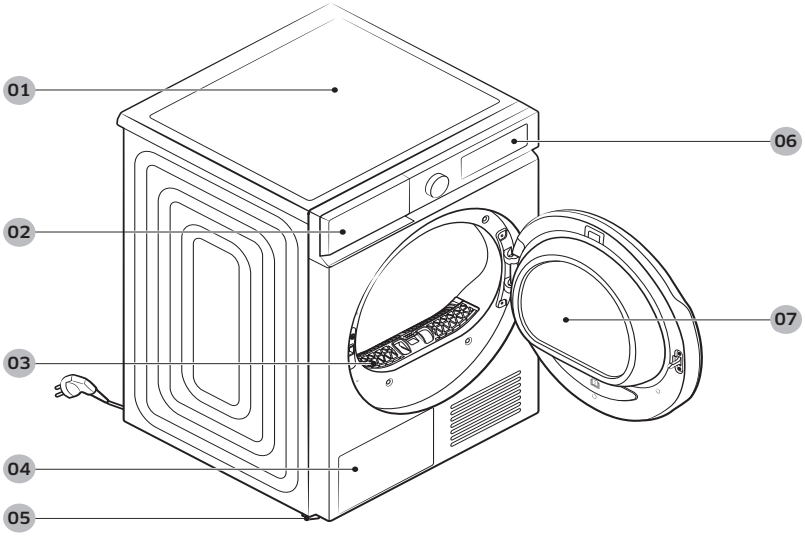

01 Top cover
02 Water Tank
03 Lint filter
04 Heat exchanger
05 Levelling Leg
06 Control Panel
07 Door

Accessories (supplied)

Hose guide

Cable tie

Hose connector

Long drain hose (2 m)

Drying rack (applicable models only)

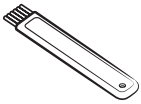

Cleaning brush

Accessories (not supplied)

Bracket-Stacking kit (Part # SK-DH; SK-DA; SKK-DF)

NOTE

- For stacking instructions with the dryer, see the installation manual included in the stacking kit.
- For information on which stacking kit model you can use to stack your dryer on the washing machine, see the user manual included in your Samsung washing machine.

B-PJT_DV5000B_SimpleUX_SG_DC68-04400C-00_EN.indd 2 2022/5/18 15:57:50

Safety information

Important safety symbols

What the icons and signs in this user manual mean:

⚠ **WARNING**

Hazards or unsafe practices that may result in severe personal injury, death and/or property damage.

⚠ **CAUTION**

Hazards or unsafe practices that may result in personal injury and/or property damage.

⚠ **WARNING**

To reduce the risk of fire or explosion, follow these basic precautions.

NOTE

Indicates that a risk of personal injury or material damage exists.

⚠ **CAUTION**

Risk of fire/risk of poisoning/risk of material damage and damage to the appliance

The appliance contains R290, a refrigerant that is environmentally friendly but flammable. If it is not disposed of correctly, this may result in fire or poisoning.

Dispose of the appliance correctly and do not damage the pipes in the refrigerant circuit.

Read the instructions

These warning signs are here to prevent injury to yourself and others.

Please follow them explicitly.

After reading this manual, store it in a safe place for future reference.

Read all instructions before using the appliance.

As with any equipment that uses electricity and moving parts, potential hazards exist. To safely operate this appliance, familiarize yourself with its operation and exercise care when using it.

⚠ **WARNING**

Risk of Fire

- Clothes dryer installation must be performed by a qualified technician.
- Install the clothes dryer according to the manufacturer's instructions and local codes.
- To reduce the risk of severe injury or death, follow all installation instructions.

B-PJT_DV5000B_SimpleUX_SG_DC68-04400C-00_EN.indd 3 2022/5/18 15:57:50

⚠ WARNING

To reduce the risk of fire, electric shock, or injury to persons when using your appliance, follow basic precautions, including the following:

1. This appliance is not to be used by persons (including children) with reduced physical, sensory or mental capabilities, or lack of experience and knowledge, unless they have been given supervision or instruction concerning use of the appliance by a person responsible for their safety.
2. For use in Europe: This appliance can be used by children aged from 8 years and above and persons with reduced physical, sensory or mental capabilities or lack of experience and knowledge if they have been given supervision or instruction concerning use of the appliance in a safe way and understand the hazards involved. Children shall not play with the appliance. Cleaning and user maintenance shall not be made by children without supervision.
3. Children should be supervised to ensure that they do not play with the appliance.
4. If the supply cord is damaged, it must be replaced by the manufacturer, its service agent or similarly qualified persons in order to avoid a hazard.
5. For appliances with ventilation openings at the base, make sure that items such as carpets or mats do not obstruct the openings.

B-PJT_DV5000B_SimpleUX_SG_DC68-04400C-00_EN.indd 4 2022/5/18 15:57:51

6. For use in Europe: Children of less than 3 years should be kept away unless continuously supervised.
7. CAUTION: In order to avoid a hazard due to inadvertent resetting of the thermal cut-out, this appliance must not be electrical connected through an external switching device, such as a timer, or connected to a circuit that is regularly switched on and off by the utility.
8. The tumble dryer is not to be used if industrial chemicals have been used for cleaning.
9. The lint trap has to be cleaned frequently if applicable.
10. Lint must not to be allowed to accumulate around the tumble dryer. (not applicable for appliances intended to be vented to the exterior of the building)
11. Adequate ventilation has to be provided to avoid the back flow of gases into the room from appliances burning other fuels, including open fires.
12. Do not dry unwashed items in the tumble dryer.
13. Items that have been soiled with substances such as cooking oil, acetone, alcohol, petrol, kerosene, spot removers, turpentine, waxes and wax removers should be washed in hot water with an extra amount of detergent before being dried in the tumble dryer.
14. Items such as foam rubber (latex foam), shower caps, waterproof textiles, rubber backed articles and clothes or pillows fitted with foam rubber pads should not be dried in the tumble dryer.

B-PJT_DV5000B_SimpleUX_SG_DC68-04400C-00_EN.indd 5 2022/5/18 15:57:51

15. The final part of a tumble dryer cycle occurs without heat (cool down cycle) to ensure that the items are left at a temperature that ensures such items will not be damaged.
16. Remove all objects from pockets such as lighters and matches.
17. WARNING: Never stop a tumble dryer before the end of the drying cycle unless all items are quickly removed and spread out so that the heat is dissipated.
18. Exhaust air must not be discharged into a flue which is used for exhausting fumes from appliances burning gas or other fuels.
19. The appliance must not be installed behind a lockable door, a sliding door or a door with a hinge on the opposite side to that of the tumble dryer, in such a way that a full opening of the tumble dryer door is restricted.
20. WARNING: The appliance must not be supplied through an external switching device, such as a timer, or connected to a circuit that is regularly switched on and off by a utility.
21. Fabric softeners, or similar products, should be used as specified by the fabric softener instructions.

WARNING; RISK OF FIRE / FLAMMABLE MATERIALS

22. WARNING: In the appliance enclosure or in the built-in structure, keep ventilation openings clear of obstruction.

B-PJT_DV5000B_SimpleUX_SG_DC68-04400C-00_EN.indd 6 2022/5/18 15:57:51

23. WARNING: Do not damage the refrigerant circuit.

24. The appliance contains R290, a refrigerant that is environmentally friendly but flammable.
Keep fire and ignition sources away from the appliance.

To minimize the risk of fire in a tumble dryer, the following should be observed

⚠ WARNING

Items that have been spotted or soaked with vegetable or cooking oil constitute a fire hazard and should not be placed in a tumble dryer. Oil-affected items can ignite spontaneously, especially when exposed to heat sources such as in a tumble dryer. The items become warm, causing an oxidation reaction in the oil. Oxidation creates heat. If the heat cannot escape, the items can become hot enough to catch fire. Piling, stacking or storing oil-affected items can prevent heat from escaping and so create a fire hazard. If it is unavoidable that fabrics that contain vegetable or cooking oil or have been contaminated by hair care products be placed in a tumble dryer they should first be washed in hot water with extra detergent – this will reduce, but not eliminate, the hazard. The 'cool down' cycle of tumble dryers should be used to reduce the temperature of the items. They should not be removed from the tumble dryer or piled or stacked while hot.

Items that have been previously cleaned in, washed in, soaked in or spotted with petrol/gasoline, drycleaning solvents or other flammable or explosive substances should not be placed in a tumble dryer. Highly flammable substances commonly used in domestic environments include acetone, denatured alcohol, petrol/gasoline, kerosene, spot removers(some brands), turpentine, waxes and wax removers.

Items containing foam rubber(also known as latex foam) or similarly textured rubber. Like materials should not be dried in a tumble dryer on a heat setting. Foam rubber materials can, when heated, produce fire by spontaneous combustion.

Fabric softeners or similar products should not be used in a tumble dryer to eliminate the effects of static electricity unless this practice is specifically recommended by the manufacturer of the fabric softener or product.

Undergarments that contain metal reinforcements should not be placed in a tumble dryer. Damage to the tumble dryer can result if metal reinforcements come loose during drying. A drying rack should be used for such items.

Plastic articles such as shower caps or babies' waterproof napkin covers should not be placed in a tumble dryer.

Rubber-backed articles, clothes fitted with foam rubber pads, pillows, galoshes and rubber-coated tennis shoes should not be placed in a tumble dryer.

Do not dry unwashed items in the tumble dryer(or washing machine drying mode,etc).

Items that have been soiled with substances such as cooking oil, acetone, alcohol, petrol, Kerosene, spot removers, turpentine, waxes and wax removers should be washed in hot water with an extra amount of detergent before being dried in the tumble dryer.

Items such as foam rubber(latex foam), shower caps, waterproof textiles, rubber backed articles and clothes or pillows fitted with foam rubber pads should not be dried in the tumble dryer.

B-PJT_DV5000B_SimpleUX_SG_DC68-04400C-00_EN.indd 7 2022/5/18 15:57:51

The final part of a tumble dryer cycle occurs without heat(cool down cycle) to ensure that the items are left at a temperature that ensures that the items will not be damaged.

Oil-affected items can ignite spontaneously, especially when exposed to heat sources such as in a tumble dryer. The items become warm, causing an oxidation reaction in the oil. Oxidation creates heat. If the heat cannot escape, the items can become hot enough to catch fire. Piling, stacking or storing oil-affected items can prevent heat from escaping and so create a fire hazard.

If it is unavoidable that fabrics that contain vegetable or cooking oil or have been contaminated by hair care products be placed in a tumble dryer they should first be washed in hot water with extra detergent - this will reduce, but will not eliminate, the hazard.

Never stop a tumble dryer before the end of the drying cycle unless all items are quickly removed and spread out so that the heat is dissipated.

Remove all objects from pockets such as lighters and matches.

The tumble dryer(or washing machine drying mode, etc) is not to be used if industrial chemicals have been used for cleaning.

Critical installation warnings

⚠ **WARNING**

The installation of this appliance must be performed by a qualified technician or service company.

Failure to do so may result in electric shock, fire, an explosion, problems with the product, or injury.

Plug the power cord into a wall socket and use the socket for this appliance only. In addition, do not use an extension cord.

Sharing a wall socket with other appliances using a power strip or extending the power cord may result in electric shock or fire.

Ensure that the power voltage, frequency and current are the same as those of the product specifications. Failure to do so may result in electric shock or fire. Failure Plug the power plug into the wall socket firmly.

Remove all foreign substances such as dust or water from the power plug terminals and contact points using a dry cloth on a regular basis.

Unplug the power plug and clean it with a dry cloth.

Failure to do so may result in electric shock or fire.

Keep all packaging materials well out of the reach of children, as packaging materials can be dangerous to children.

If a child places a bag over its head, it may result in suffocation.

This appliance must be properly grounded.

Do not ground the appliance to a gas pipe, plastic water pipe, or telephone line.

This may result in electric shock, fire, an explosion, or problems with the product.

Never plug the power cord into a socket that is not grounded correctly and make sure that it is in accordance with local and national codes.

Do not install or keep the product exposed to the outdoor elements.

Do not use a damaged power plug, damaged power cord or loose wall socket.

This may result in electric shock or fire.

If the plug (power supply cord) is damaged, it must be replaced by the manufacturer or its service agent or a similar qualified technician in order to avoid a hazard.

B-PJT_DV5000B_SimpleUX_SG_DC68-04400C-00_EN.indd 8 2022/5/18 15:57:51

This appliance should be positioned to be accessible to the power plug after installation.

Do not pull or excessively bend the power cord.

Do not twist or tie the power cord.

Do not hook the power cord over a metal object, place a heavy object on the power cord, insert the power cord between objects, or push the power cord into the space behind the appliance.

This may result in electric shock or fire.

Do not pull the power cord, when unplugging the power plug.

Unplug the power plug by holding the plug.

Failure to do so may result in electric shock or fire.

This appliance must be properly grounded. Never plug the power cord into a receptacle that is not grounded adequately and in accordance with local and national codes. See installation instructions for grounding this appliance.

Install this appliance in a location with solid, level floor.

Failing to do so may result in abnormal vibrations, noise or problems with the product.

Since an ingredient in hair spray may degrade the hydrophile property of the heat exchanger so that dew may appear on the outer surface of the appliance when the cooling operation is running, do not install the appliance in a beauty salon.

This appliance should be positioned so that the power plug, the water supply taps, and the drain pipes are accessible.

Critical usage warnings

⚠ **WARNING**

Do not let children or pets on or into the product. In addition, when disposing of this product, disassemble the door lock (lever).

This may result in children falling and injuring themselves.

If children become locked in the product, there is a danger of suffocation.

Do not try to access the inside of the product when the drum is rotating.

Do not sit on the product or lean against the door.

This may result in the product turning over and resulting in injury.

Dry the laundry only after it was spun by an appropriate washing machine.

Do not dry unwashed items in the tumble dryer.

Do not drink the condensed water.

Never stop a tumble dryer before the end of the drying cycle unless all items are quickly removed and spread out so that the heat is dissipated.

Do not dry laundry contaminated by inflammable materials such as gasoline, kerosene, benzene, thinner, alcohol, etc.

This may result in electric shock, fire or explosion.

Do not let pets chew or play with the dryer.

This may result in electric shock or injury.

When disposing of the product, separate the door and the power cord before disposing of the product.

Failing to do so may result in damage to the power code or an injury.

Do not touch the power plug with wet hands.

This may result in electric shock.

B-PJT_DV5000B_SimpleUX_SG_DC68-04400C-00_EN.indd 9 2022/5/18 15:57:51

When gas (city gas, propane gas, LP gas) leaks, do not touch this appliance or the power cord, ventilate immediately.

At this time, do not use the ventilating fan.

A spark may cause an explosion or fire.

Do not repair, replace, or attempt to service any part of the appliance unless specifically recommended in the user-repair instructions. You must also have the skills necessary to service this appliance.

Do not attempt to repair, disassemble, or modify the appliance yourself.

Do not use any fuse(such as cooper, steel wire, etc.) other than the standard fuse.

When repairing or reinstalling the appliance is required, contact your nearest service center.

Failure to do so may result in electric shock, fire, problems with the product, or injury.

The product you have purchased is designed for domestic use only.

The use for business purposes qualifies as product misuse. In this case, the product will not be covered by the standard warranty provided by Samsung and no responsibility can be attributed to Samsung for malfunctions or damages resulting from such misuse.

If the product generates strange noise, smells of something burning, or generates smoke, immediately cut-off the power and contact the service center.

Otherwise, it may cause an electric shock or fire as a result.

Do not let children (or pets) play in or on your product. The product door does not open easily from the inside and children may be seriously injured if trapped inside.

B-PJT_DV5000B_SimpleUX_SG_DC68-04400C-00_EN.indd 10 2022/5/18 15:57:51

Usage cautions

⚠ **CAUTION**

Do not stand on top of the appliance or place objects (such as laundry, lighted candles, lighted cigarettes, dishes, chemicals, metal objects, etc.) on the appliance.

This may result in electric shock, fire, problems with the product, or injury.

Do not touch the glass door and inside of the drum during or just after drying as it is hot.

This may result in burns.

The door glass becomes hot during and drying. Therefore, do not touch the door glass.

Also, do not allow children to play around the dryer or touch the door glass.

This may result in burns.

Do not press the buttons using sharp objects such as pins, knifes, fingernails, etc.

This may result in electric shock or injury.

Do not dry laundry containing forming rubber (latex) or similar rubber textures.

If forming rubber is heated, it may start a fire.

Do not dry laundry contaminated by vegetable oil or cooking oil as a large amount of the oil will not be removed when washing the laundry. In addition, use the unheated dry cycle so that the laundry is not heated.

The oxidization heat of the oil may start a fire.

Do not dry laundry contaminated by foreign substances such as oil, cream, lotion, or other chemicals that are used in places such as skincare room, massage parlor, beauty salon, or hospital.

This may result in electric shock, fire, malfunction, and injury.

Make sure that the pockets of all clothing to be dried are empty.

Hard, sharp objects, such as coins, safety pins, nails, screws, or stones can cause extensive damage to the appliance.

Do not dry clothing with large buckles, buttons, or other heavy metal (zippers, hooks and eyelets, button-up covers).

If necessary, use the laundry net for small and lightweight laundry such as fabric tie belt , apron strings, and underwire bras which can dissolve or break during a cycle.

Dryer sheets are compatible with this model, and are recommended for better drying performance.

Dryer sheets are also beneficial in reducing the static electricity generated during a drying cycle. Static electricity could lead to damage of laundry items and potentially the appliance.

Do not use the dryer near dangerous powders such as coal dust, wheat flour, etc.

This may result in electric shock, fire or an explosion.

Do not place inflammable materials near the product.

This may result in toxic gases from the product, damage to parts, electric shock, fire or an explosion.

The appliance should not be placed behind lockable doors etc.

Do not touch the rear side of the appliance during or immediately after drying is complete.

The appliance remains hot and may cause burns.

B-PJT_DV5000B_SimpleUX_SG_DC68-04400C-00_EN.indd 11 2022/5/18 15:57:51

Critical cleaning warnings

⚠ **WARNING**

Do not clean the appliance by spraying water directly onto it.

Do not use benzene, thinner or alcohol to clean the appliance.

This may result in discoloration, deformation, damage, electric shock or fire.

Before cleaning or performing maintenance, unplug the appliance from the wall socket.

Failure to do so may result in electric shock or fire.

Clean the filter case before and after using the dryer.

Clean the inside of the product on a regular basis by asking an authorized service engineer.

Clean the heat exchanger with a soft brush or vacuum cleaner once a month, Do not touch the heat exchanger with your hand. Otherwise, it may cause an injury.

The interior of the dryer should be cleaned periodically by qualified service personnel.

Care for preventing freezing

- Install the dryer in an area where the temperature does not drop below zero degree Celsius.
- If draining directly using a long drain hose, water remaining inside the hose can freeze in winter. Make sure there is no water left inside the hose after use.
- If the drain hose has frozen, wrap the hose with a towel soaked in warm water for approximately ten minutes to thaw it.

Instructions about the WEEE

Correct Disposal of This Product (Waste Electrical & Electronic Equipment)

(Applicable in countries with separate collection systems)

This marking on the product, accessories or literature indicates that the product and its electronic accessories (e.g. charger, headset, USB cable) should not be disposed of with other household waste at the end of their working life. To prevent possible harm to the environment or human health from uncontrolled waste disposal, please separate these items from other types of waste and recycle them responsibly to promote the sustainable reuse of material resources.

Household users should contact either the retailer where they purchased this product, or their local government office, for details of where and how they can take these items for environmentally safe recycling.

Business users should contact their supplier and check the terms and conditions of the purchase contract. This product and its electronic accessories should not be mixed with other commercial wastes for disposal.

For information on Samsung's environmental commitments and product regulatory obligations, e.g. REACH, WEEE or Batteries, visit our sustainability page available via www.samsung.com

B-PJT_DV5000B_SimpleUX_SG_DC68-04400C-00_EN.indd 12 2022/5/18 15:57:51

Declaration of conformity

Hereby, Samsung declares that this radio equipment is in compliance with Directive 2014/53/EU and with the relevant statutory requirements in the UK. The full text of the EU declaration of conformity and the UK declaration of conformity is available at the following internet address: The official Declaration of conformity may be found at http://www.samsung.com, go to Support > Support Home and enter the model name.

Wi-Fi max transmitter power : 20 dBm at 2.412 GHz – 2.472 GHz

Turning on Wi-Fi (for network models only)

NOTE

Turning on Wi-Fi consumes more energy. Under an environment where Wi-Fi is frequently turned on, actual energy consumption can be greater than the values in the specification sheet section.

1. Tap and hold ⏻ to turn on the dryer.
2. Tap and hold ⊼.
   - **2-1.** The dryer enters AP mode and connects to your smartphone.
   - **2-2.** Tap ⊼ to authenticate your dryer.
   - **2-3.** Once the authentication process is complete, your dryer is successfully connected to the app.

NOTE

Tap and hold ☝ for 3 seconds to enter the System Functions menu, turn the Navigation dial to select Wi-Fi, and tap ○ to turn it off.

B-PJT_DV5000B_SimpleUX_SG_DC68-04400C-00_EN.indd 13 2022/5/18 15:57:51

Installation

Follow these instructions carefully to ensure proper installation of the dryer and prevent accidents when doing laundry.

Installation requirements

Electrical and grounding requirements

- The dryer requires an AC 220-240 V / 50 Hz electrical supply.
- The dryer must be properly grounded. If the dryer malfunctions or breaks down, grounding reduces the risk of electric shock by providing a path of least resistance for the electric current. The dryer comes with a power cord that has a 3-prong grounding plug. The plug must be plugged into an appropriate outlet that is properly installed and grounded in accordance with all local codes and ordinances.
- If you have any questions regarding the electrical or grounding requirements, please contact Samsung or a qualified electrician.

⚠ **WARNING**

- Plug into a grounded, 3-prong outlet.
- Do not use a damaged power plug, cord, or loose or damaged wall outlet.
- Do not use an adapter or an extension cord.
- Improper connection of the equipment-grounding conductor may result in electric shock. If you are unsure if the dryer is properly grounded, check with a qualified electrician.
- Do not modify the power plug, power cord, or power outlet in any way.
- Do not connect the ground wire to plastic plumbing lines, gas lines, or hot water pipes.

Alcove installation

Minimum clearance for stable operation:

- Sides: 25 mm, Top: 25 mm, Rear: 50 mm, Front: 490 mm

If installing the dryer with a washing machine, the front of the alcove or closet must have an unobstructed air opening of at least 550 mm.

B-PJT_DV5000B_SimpleUX_SG_DC68-04400C-00_EN.indd 14 2022/5/18 15:57:51

Step-by-step installation

STEP 1 Select a location

Location requirements:

Select a level, well-constructed surface that will withstand vibrations. Select a location where a grounded, 3-prong outlet is easily accessible.

⚠ **WARNING**

- Install the dryer indoors only.
- Do not install the dryer in areas exposed to the weather.
- Do not install the dryer where the temperature may fall below 5 °C or rise above 35 °C.
- Do not install the dryer where gas may leak.
- Do not block the cooling grill's air inlet located at the dryer front.

STEP 2 Adjust the levelling feet

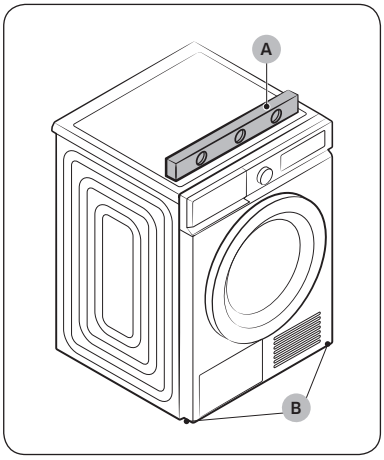

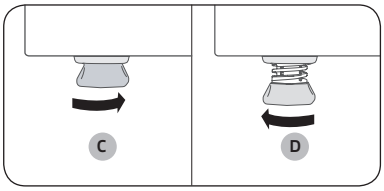

1. Gently slide the dryer into the desired location.
2. Use a level (A) and check the levelness of the dryer from side to side and front to back.
3. If the dryer is not level, turn the levelling feet (B) left or right to adjust the height.
4. Once the dryer is level, make sure the dryer stands firmly on the floor.
5. Plug in the dryer.

NOTE

- To set the dryer to the same height as the washing machine, turn the levelling feet to the right until it fully retracts (C). Then, turn the levelling feet to the left to extend (D) it until the dryer and the washing machine are the same height.
- Extend the levelling feet only as much as necessary. Extending the levelling feet more than necessary can cause the dryer to vibrate.

B-PJT_DV5000B_SimpleUX_SG_DC68-04400C-00_EN.indd 15 2022/5/18 15:57:51

STEP 3 Drain hose

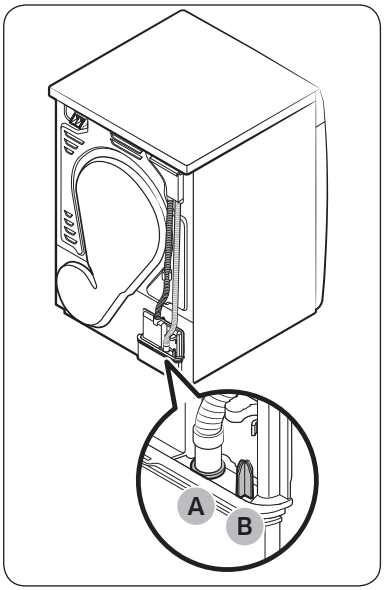

- We strongly recommend connecting the drain hose to your drainage system.
- If the drain hose connected on the dryer is too short to reach the drainage system, use the provided accessory hose (long drain hose).
- Use the built-in water tank only if you cannot connect the drain hose to a drainage system.

NOTE

As a factory default, this dryer is set to use the built-in water tank to drain condensed water.

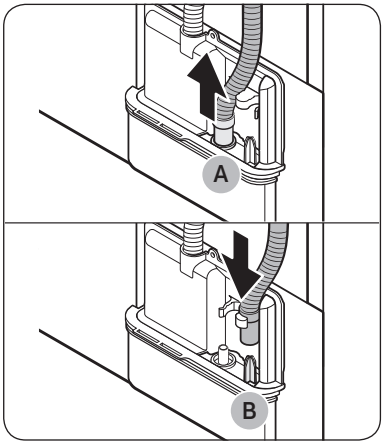

1. Remove the drain hose from hole (A), and insert it into part (B).

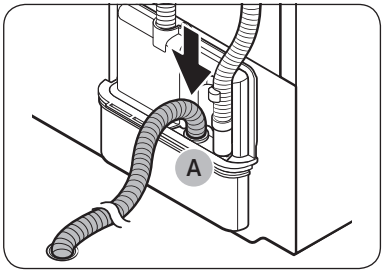

2. Insert one end of the accessory hose (long drain hose) into hole (A).
3. Insert the other end (outlet) of the accessory hose to the drainage system in one of the following ways:

B-PJT_DV5000B_SimpleUX_SG_DC68-04400C-00_EN.indd 16 2022/5/18 15:57:52

Over a wash basin:

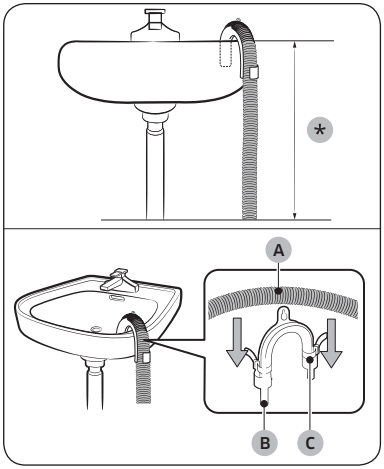

1. Make sure to place the end of the accessory hose lower than **90 cm (*)** from the bottom of dryer.
2. To bend some point of the accessory hose, use the supplied plastic **hose guide (B)** and secure the guide to the wall with a hook or to the tap with a piece of string. Assemble the **drain hose (A)** and the **hose guide (B)** and fix them with the **cable-tie (C)**.
3. You can drain the condensed water by connecting the accessory hose (long drain hose) to the drain-outlet directly.

⚠ **CAUTION**

Do not extend the drain hose. Water may leak from the connected area. Use a long drain hose.

By using the drain pipe of the wash basin:

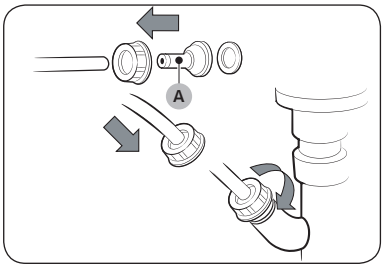

1. Assemble the **hose connector (A)**, and attach it to the end of the accessory hose as shown.

⚠ **CAUTION**

To prevent water leak, make sure to connect the hose and the connector firmly.

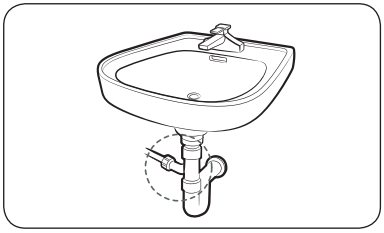

2. Connect the hose adapter directly to the drain pipe of the wash basin.

STEP 4 Power on

Plug the power cord into a wall socket protected by a fuse or circuit breaker. Then, tap ⏻ to turn on the dryer.

B-PJT_DV5000B_SimpleUX_SG_DC68-04400C-00_EN.indd 17 2022/5/18 15:57:52

Operations

Cycle overview

Cotton	For general cotton clothes
Mixed Load	For a mix of cottons & synthetics
Synthetics	For drying synthetic fabrics
Iron Dry	Make ironing easier
Air Refresh	Deodorize & refresh
Hygiene Care	For a fresh, more hygienic clean
Bedding	For comforters & bedding
Wool	For drying wool garments
Towels	Keep towels fluffy
Delicates	For underwear & delicate items
Outdoor	Care for waterproof items
Shirts	To quickly dry a few shirts
Time Dry	Set a custom drying time
Warm Air	Gentle dry before hanging outside
Cool Air	Dry at room temp for set time
Quick Dry 35’	For cotton & other quick items

NOTE

The cycle and function names that appeared in this manual may differ from your product.

B-PJT_DV5000B_SimpleUX_SG_DC68-04400C-00_EN.indd 18 2022/5/18 15:57:52

Rack Dry (applicable models only)

Set the drying time up to 150 minutes according to the moisture and weight of the items to dry. When drying laundry using the drying rack, the Time Dry cycle is recommended.

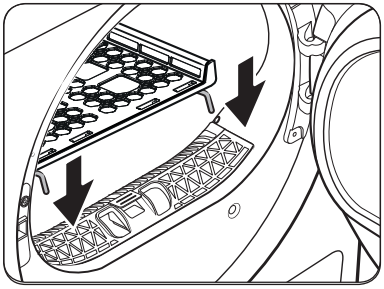

1. Position the drying rack in the drum, inserting the front lips of the rack into the holes of the door diaphram.

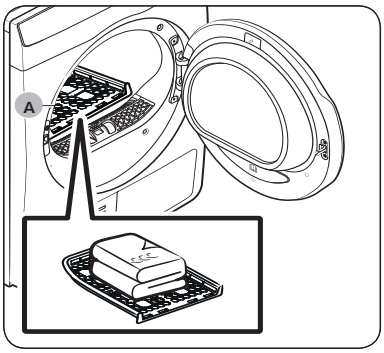

2. Place items on the rack, leaving enough space where air can circulate. For clothing items, fold and place flat on the rack.
3. Tap and hold ▷||.
4. Close the door and tap ⏻. Turn the Navigation dial to select Time Dry, and then tap ◷ repeatedly to select the drying time.

A. Rack dry

Drying suggestions

Items (max 1.5 kg)	Description
Washable sweaters (block to shape and lay flat on rack)	When drying the laundry using the rack, fold and place the clothes on the rack to prevent the clothing from becoming wrinkled.
Stuffed toys (cotton or polyester fiber filled)	

⚠ **CAUTION**

Drying foam rubber, plastic, or rubber on a heat setting may cause damage to the items and lead to a fire hazard.

B-PJT_DV5000B_SimpleUX_SG_DC68-04400C-00_EN.indd 19 2022/5/18 15:57:53

Maintenance

⚠ **WARNING**

- Do not clean the dryer by directly spraying water onto the dryer.
- Do not clean the dryer with benzene, thinner, alcohol, or acetone. This may result in discoloration, deformation, damage, electric shock, or fire.
- Before cleaning the dryer, be sure to unplug the power cord.

Lint filter

Clean the lint filter after each load.

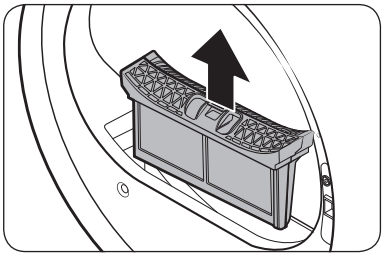

1. Open the door and pull the lint filter upward to remove.

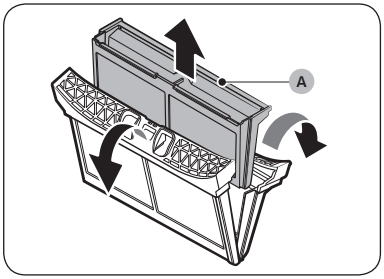

2. Open the outer filter and remove the inner filter (A).

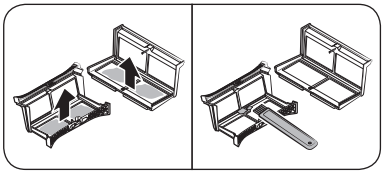

3. Unfold both the inner filter and the outer filter.
4. Remove the lint from both filters, and then clean the filters with the cleaning brush.

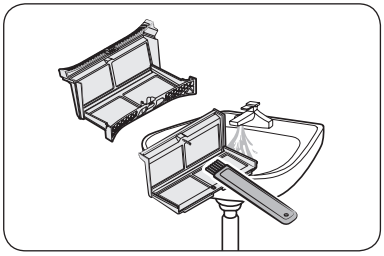

NOTE

To clean the filters thoroughly, clean the filters in running water, and then dry them completely.

B-PJT_DV5000B_SimpleUX_SG_DC68-04400C-00_EN.indd 20 2022/5/18 15:57:53

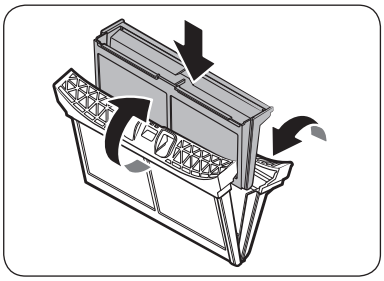

5. Put the inner filter into the outer filter, and then reinsert the lint filter into the original position.

⚠ **CAUTION**

- Clean the lint filter after each load. Otherwise, the drying performance may decrease.
- Do not operate the dryer without the inner filter inside the outer filter.
- Using the dryer with a wet lint filter may cause mold, bad odors, or a decrease in drying performance.

Water tank

To avoid leaks, empty the water tank after every load.

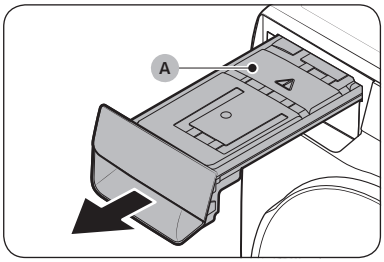

1. Using both hands, pull the water tank (A) forward to remove.

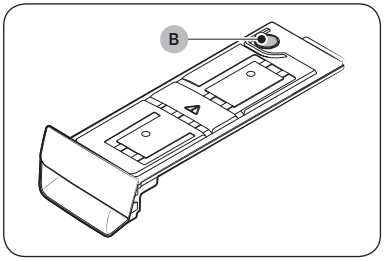

2. Empty the water through the drain hole (B) and place the water tank back into place.

NOTE

If you empty the water tank and tap and hold ▷||, the corresponding indicator turns off.

⚠ **CAUTION**

The water tank can be heavy. Pull out the water tank slowly and at level using both hands.

B-PJT_DV5000B_SimpleUX_SG_DC68-04400C-00_EN.indd 21 2022/5/18 15:57:53

Heat exchanger

Clean the heat exchanger at least once a month. (or When the Buzzer rings and the heat exchanger indicator lights up on the display.)

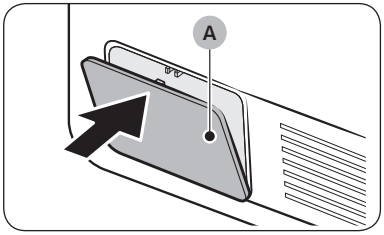

1. Gently press the top part of the **outer cover (A)** to open.

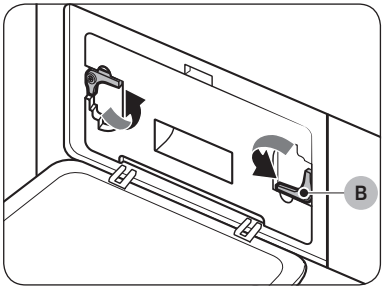

2. Unlock the **fixers (B)**.

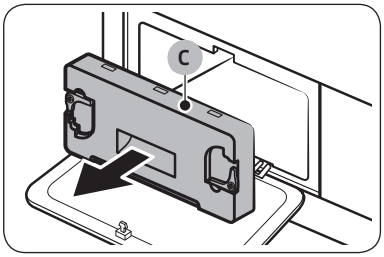

3. Remove the **inner cover (C)**.

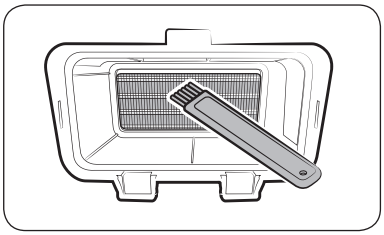

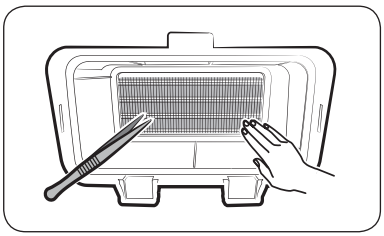

4. Clean the heat exchanger with the provided cleaning brush or a vacuum cleaner with a brush attachment. Take care not to bend or damage the heat exchanger fins when cleaning. This may lead to a decrease in drying performance.

⚠ **CAUTION**

- To avoid physical injury and burns, do not touch or clean the heat exchanger with bare hands.
- Do not use water to clean the heat exchanger.

B-PJT_DV5000B_SimpleUX_SG_DC68-04400C-00_EN.indd 22 2022/5/18 15:57:54

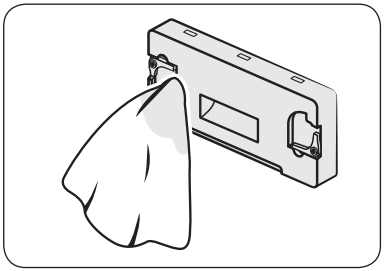

5. Clean the inner cover with a smooth, damp cloth.

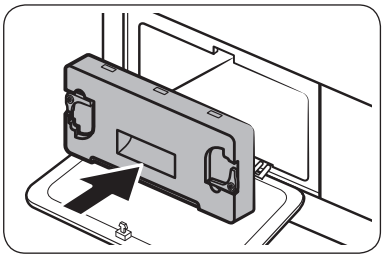

6. Reinsert the inner cover to its original position, and then lock the fixers.
7. Close the outer cover.

NOTE

After cleaning, make sure the fixers are locked.

B-PJT_DV5000B_SimpleUX_SG_DC68-04400C-00_EN.indd 23 2022/5/18 15:57:54

Troubleshooting

If there is any problem, check the information message on the LCD screen and follow the on-screen instructions.
If the problem persists, please contact the service center.

Checkpoints

If you encounter a problem with the dryer, first check the table below and try these suggestions.

Symptom	Action
Door is open	Operating the dryer with the door open. • Make sure the door is properly closed. • Make sure laundry is not caught in the door.
Dryer does not run	• Make sure the door is completely closed. • Make sure the power cord is plugged in. • Check the home's circuit breaker and fuses. • Empty the water tank. • Clean the lint filter.
Dryer does not heat	• Check the home's circuit breaker and fuses. • Select a heat setting other than **Cool Air**. • Check the lint filter and heat exchanger. Clean them if necessary. • Dryer may be in the cool-down phase of the cycle.
Dryer does not dry	Check the above, plus… • Make sure the dryer is not overloaded. • Sort light and heavy items separately. • Reposition large, bulky items to ensure even drying. • Check that the dryer is draining properly. • For small loads, add a few dry towels. • Clean the lint filter and heat exchanger.
Dryer is noisy	• Check for coins, buttons, lighters, etc. • Make sure the dryer is level and standing firmly on the floor. • The dryer may hum due to air moving through the drum and fan. This is normal.
Dries unevenly	• Seams, pockets, and other parts of clothing are harder to dry than others. This is normal. • Sort heavy and light items separately.

B-PJT_DV5000B_SimpleUX_SG_DC68-04400C-00_EN.indd 24 2022/5/18 15:57:54

Symptom	Action
Dryer emits an odor	• The dryer may draw household odors in from the surrounding air and then exhaust them. This is normal.
Dryer turns off before the load is dry	• Dryer load is too small. Add more items and restart the cycle. • Dryer load is too large. Remove items and restart the cycle.
Lint on clothes	• Make sure the lint filter is clean before every load. • Dry lint-producing items (fuzzy towels) separate from lint trappers, such as black linen pants. • Divide larger loads into smaller loads.
Items still wrinkled after Wrinkle Prevent	• Small loads of 1-4 items work best. • Load fewer items. Load similar type items.
Odors remain in items after Cool Air	• Make sure to thoroughly wash items with strong odors.

B-PJT_DV5000B_SimpleUX_SG_DC68-04400C-00_EN.indd 25 2022/5/18 15:57:54

Specifications

Protecting the environment

- This appliance is manufactured from recyclable materials. If you decide to dispose of this appliance, please observe local waste disposal regulations. Cut off the power cord so that the appliance cannot be connected to a power source. Remove the door so that animals and small children cannot get trapped inside the appliance.
- Refrigerant (Type): R290
  Refrigerant (Charging): 0.149 kg

Specification sheet

In accordance with applicable energy labelling regulations.

NOTE

"*" Asterisk(s) means variant model and can be varied (0-9) or (A-Z).

Samsung		
Model Name		DV9*BB******
Capacity	kg	9.0
Type		Condenser
Energy Efficiency		
A+++ (highest efficiency) to D (least efficient)		A+++
Energy Consumption		
Annual Energy Consumption (AE_C) (Energy consumption is based on 160 drying cycles of the standard cotton programme at full and partial load, and the consumption of the low-power modes. Actual energy consumption per cycle will depend on how the appliance is used.)	kWh/yr	192.0
Automatic tumble drier		Yes
Energy consumption (E_dry) standard cotton programme at full load	kWh	1.58
Energy consumption (E_dry.1/2) standard cotton programme at partial load	kWh	0.87
off mode and left-on mode		
The power consumption off-mode (P_o) at full load	W	0.50
The power consumption in left-on mode (P_l) at full load	W	5.00
Duration of the left-on mode	min	10
Programme to which the information on the label and the Sheet relate ('standard cotton programme' used at full and partial load is the standard drying programme to which the information in the label and the fiche relates. This programme is suitable for drying normal wet cotton laundry and it is the most efficient programme in terms of energy consumption for cotton. Consumption data can vary from the nominal values given above depending on the size of the load, types of textiles, residual moisture levels after spinning, fluctuations in the electricity supply and any extra options selected.)		Cotton + Dry Level 2 + (Wrinkle Prevent Off)

B-PJT_DV5000B_SimpleUX_SG_DC68-04400C-00_EN.indd 26 2022/5/18 15:57:54

programme duration of the standard program		
Weighted Programme time standard cotton programme at full load and partial load	min	151
Programme Time (T_dry) standard cotton programme at full load	min	182
Programme Time (T_dry.1/2) standard cotton programme at partial load	min	128
condensation efficiency class		
A (most efficient) to G (least efficient)		B
Average condensation efficiency at full load	%	86
Average condensation efficiency at partial load	%	86
Weighted condensation efficiency	%	86
Airborne noise emissions		
Dry at full load	dB (A) re 1 pW	64

B-PJT_DV5000B_SimpleUX_SG_DC68-04400C-00_EN.indd 27 2022/5/18 15:57:54

Consumption data

Model	Cycle	Load (kg) [1]	Energy (kWh)	Max. Duration (Minutes)
DV9*BB******	Cotton [2]	9.0	1.58	182
		4.5	0.87	128
	Iron Dry [2]	9.0	1.00	110
	Synthetics	4.0	0.69	70

[1] : Weight of dry laundry

[2] : EN 61121:2013 test program

All data without a “star” against it was calculated using EN 61121:2013

Consumption data can vary from the nominal values given above depending in the size of the load, types of textiles, residual moisture levels after spinning, fluctuations in the electricity supply and any extra options selected.

Network standby power consumption

Power consumption	Network Standby mode	1.90 W
	Time in networked standby mode (Wi-Fi)	10 min

B-PJT_DV5000B_SimpleUX_SG_DC68-04400C-00_EN.indd 28 2022/5/18 15:57:54

Memo

Memo

Memo

SAMSUNG

DC68-04400C-00