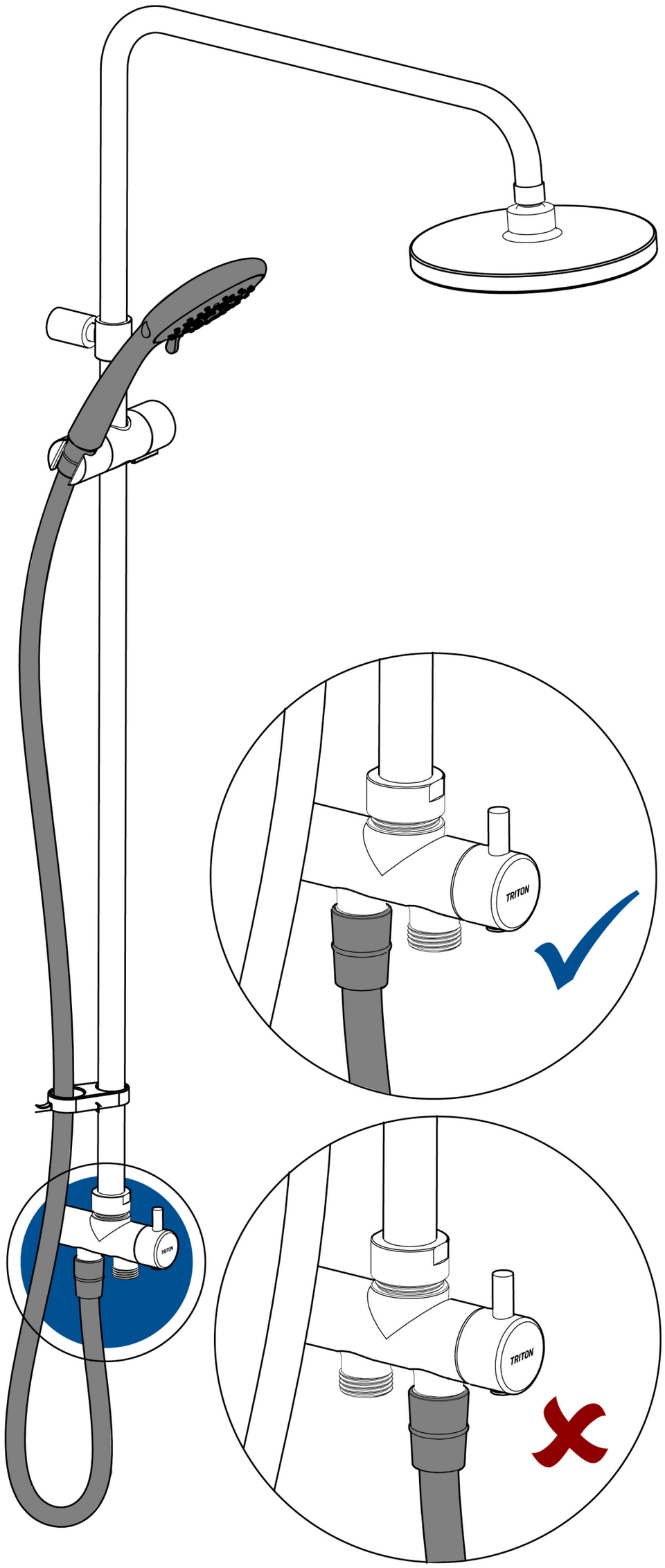

IMPORTANT
Ensure the Shower Head Hose is connected to the outlet (back) Diverter Valve connector, failure to do this may cause damage to your shower.

Long Shower Hose

Feed hose through the hose retainer. Insert a seal into each conical nut at either end of the hose. Connect one end of the hose to the shower head and place in shower head holder. Then connect the remaining end to the rear threaded outlet port of the DuElec® Diverter.