# CALIFORNIA

## SOFA

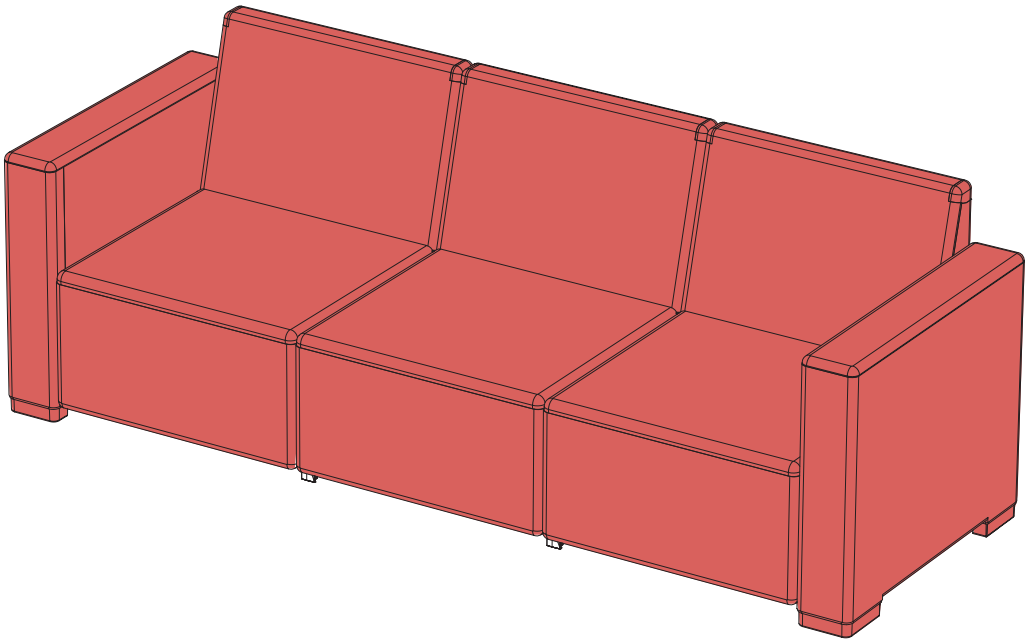

"CALIFORNIA 3-SEATER" V1.2 / 553340 / 442015.442015

ALLIBERT

Ericssonstraat 17 | 5121 MK RIJEN | The Netherlands | WWW.ALLIBERT-OUTDOOR.COM

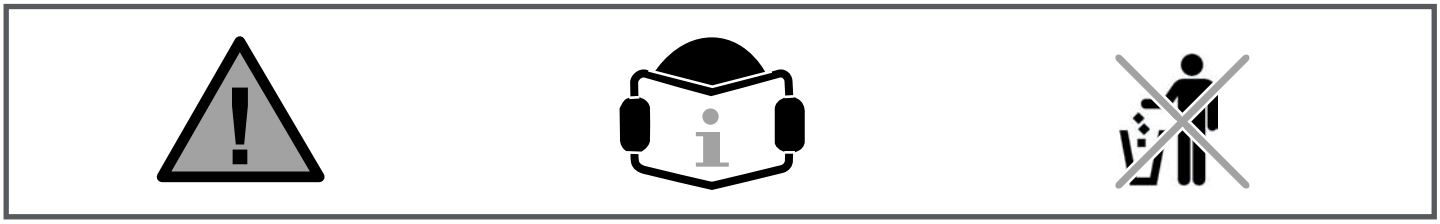

| NEN 581 | | |
|---|---|---|
| ✓ | ✓ | ✓ |

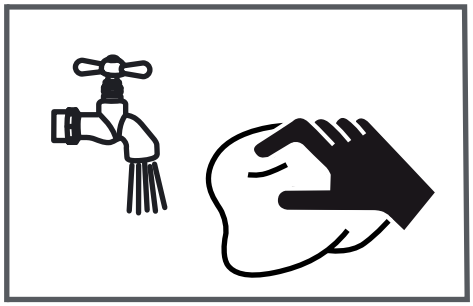

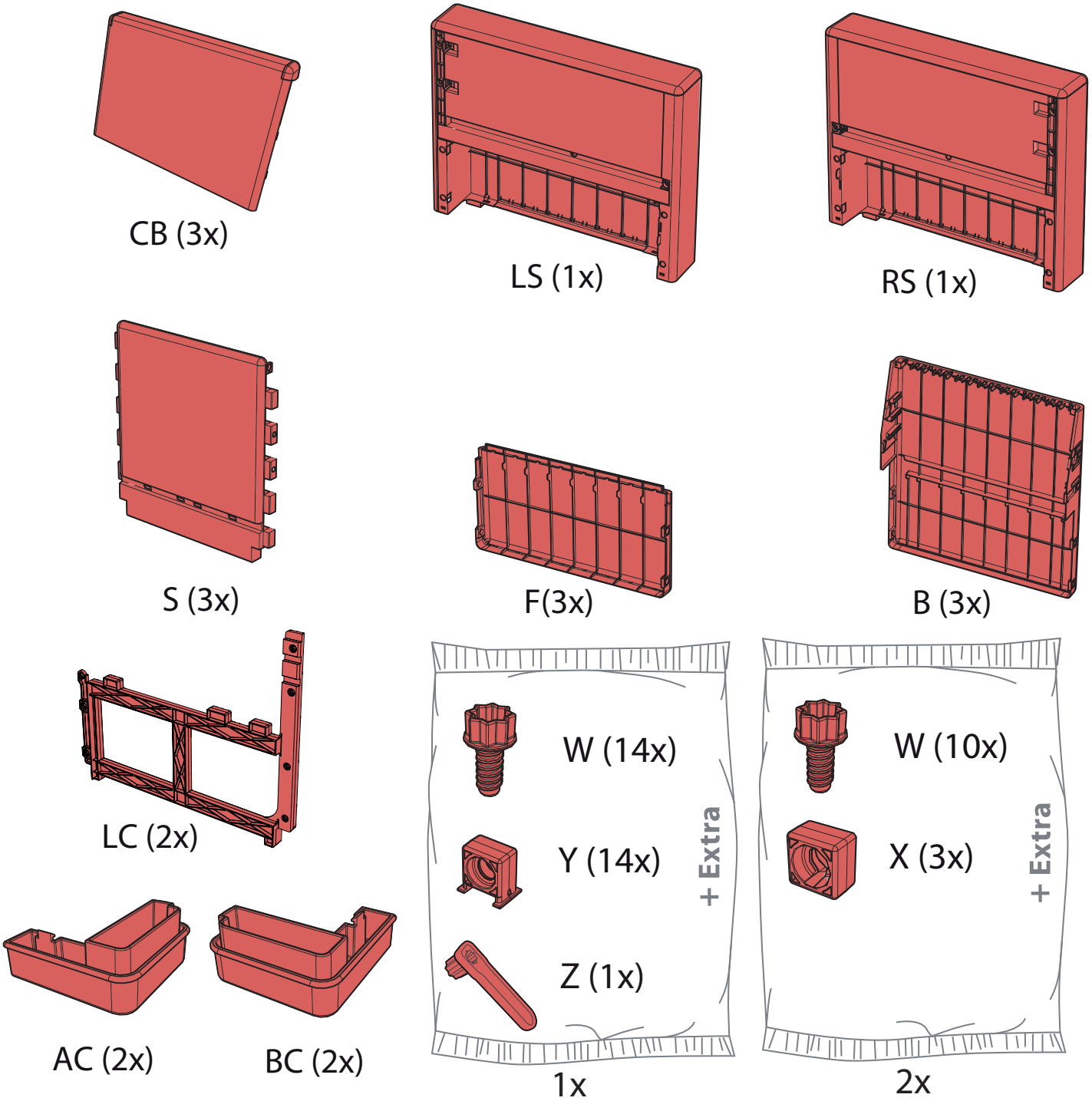
CB (3x)
LS (1x)
RS (1x)
S (3x)
F(3x)
B (3x)
LC (2x)
W (14x)
Y (14x)
Z (1x)
+ Extra
1x
W (10x)
X (3x)
+ Extra
2x
AC (2x)
BC (2x)

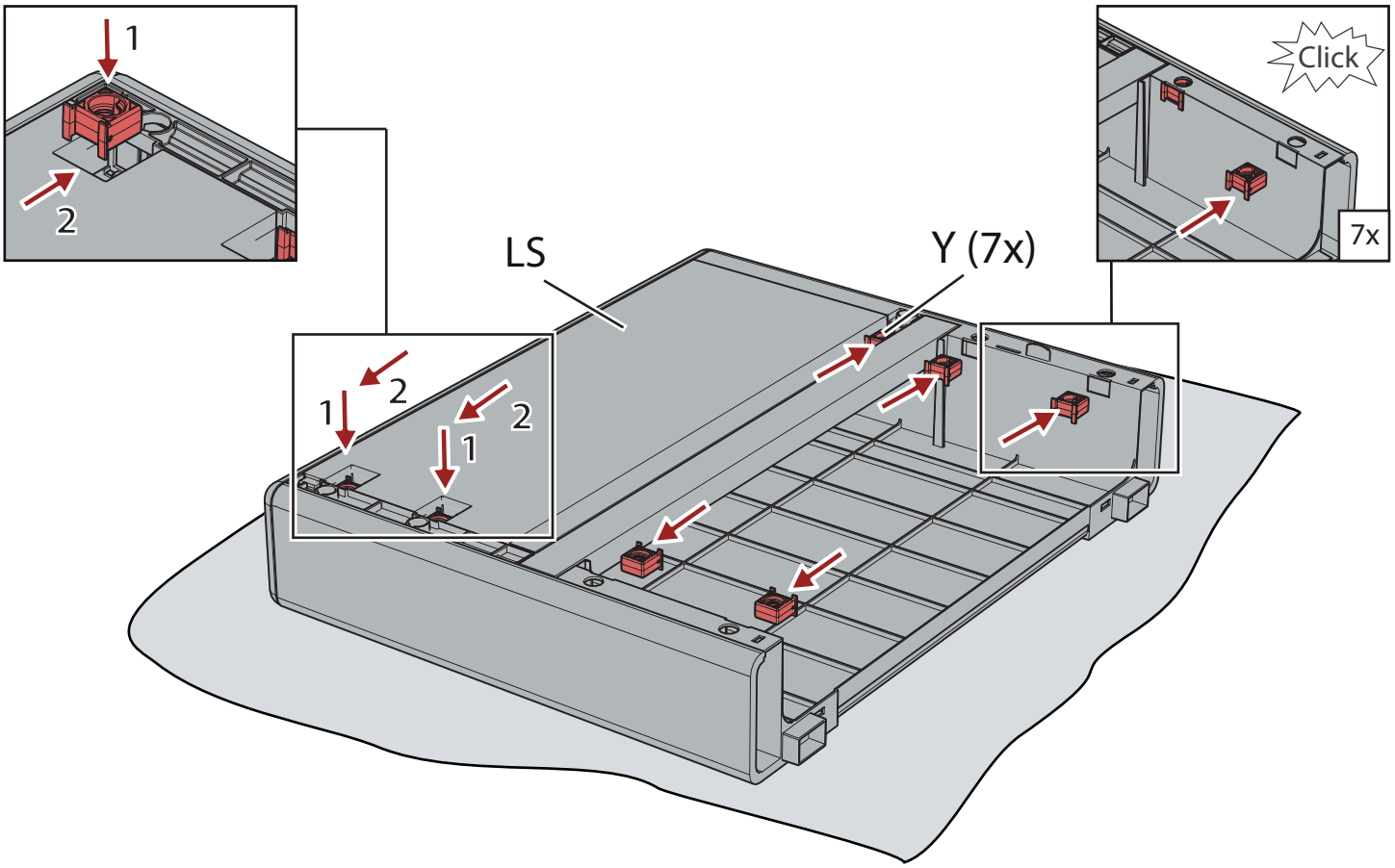


1

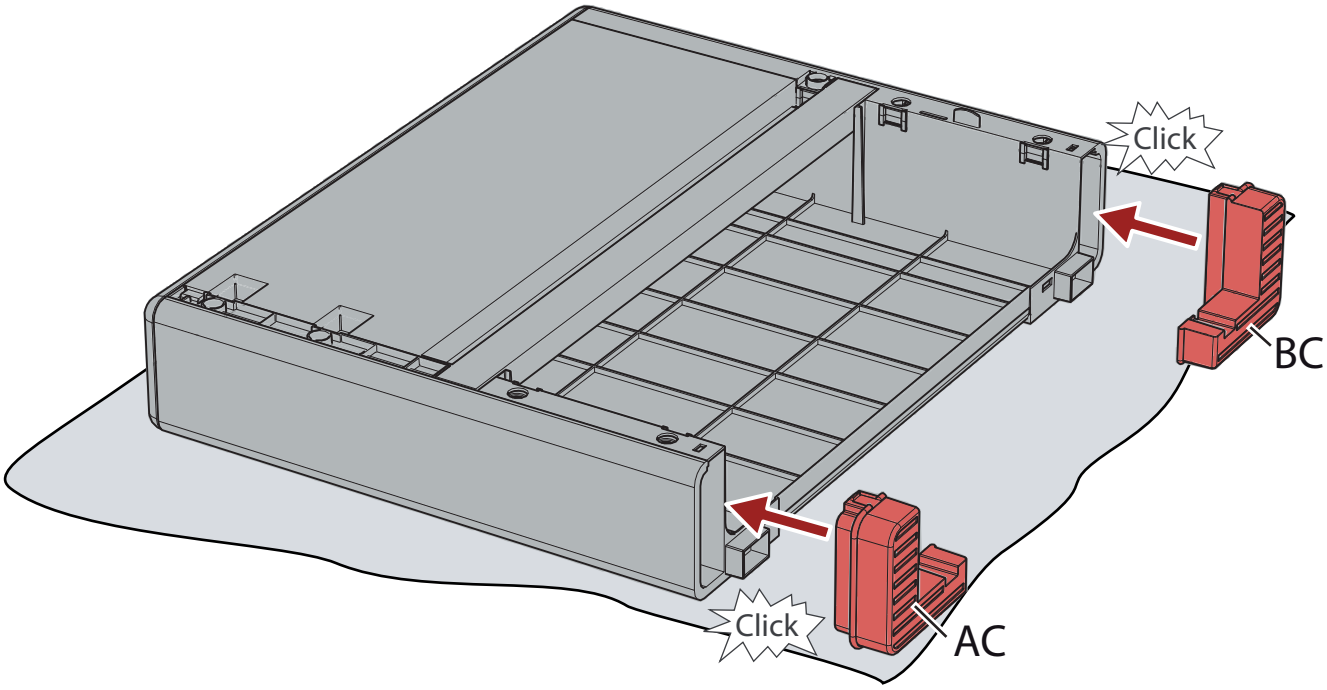


2

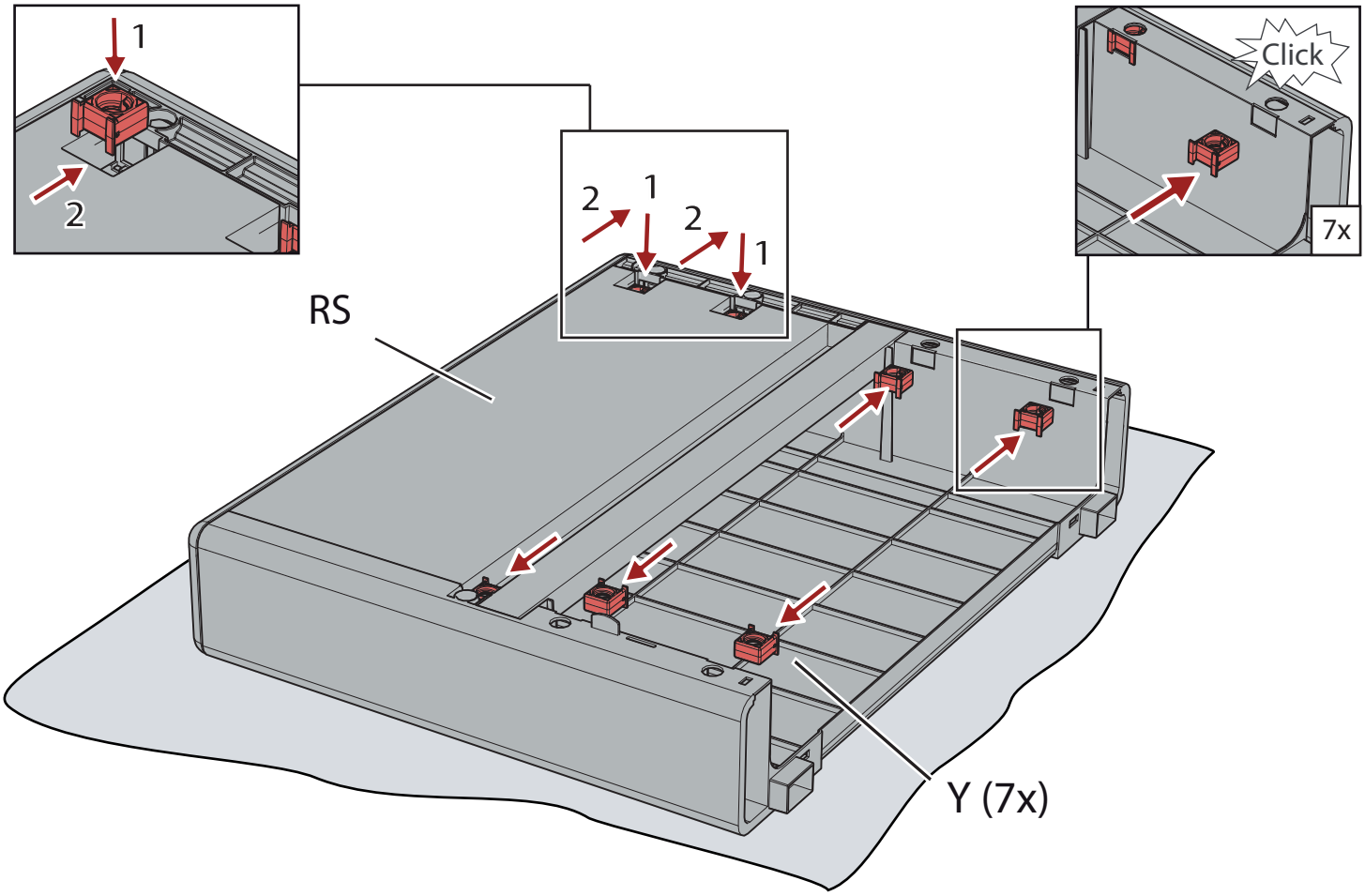


3

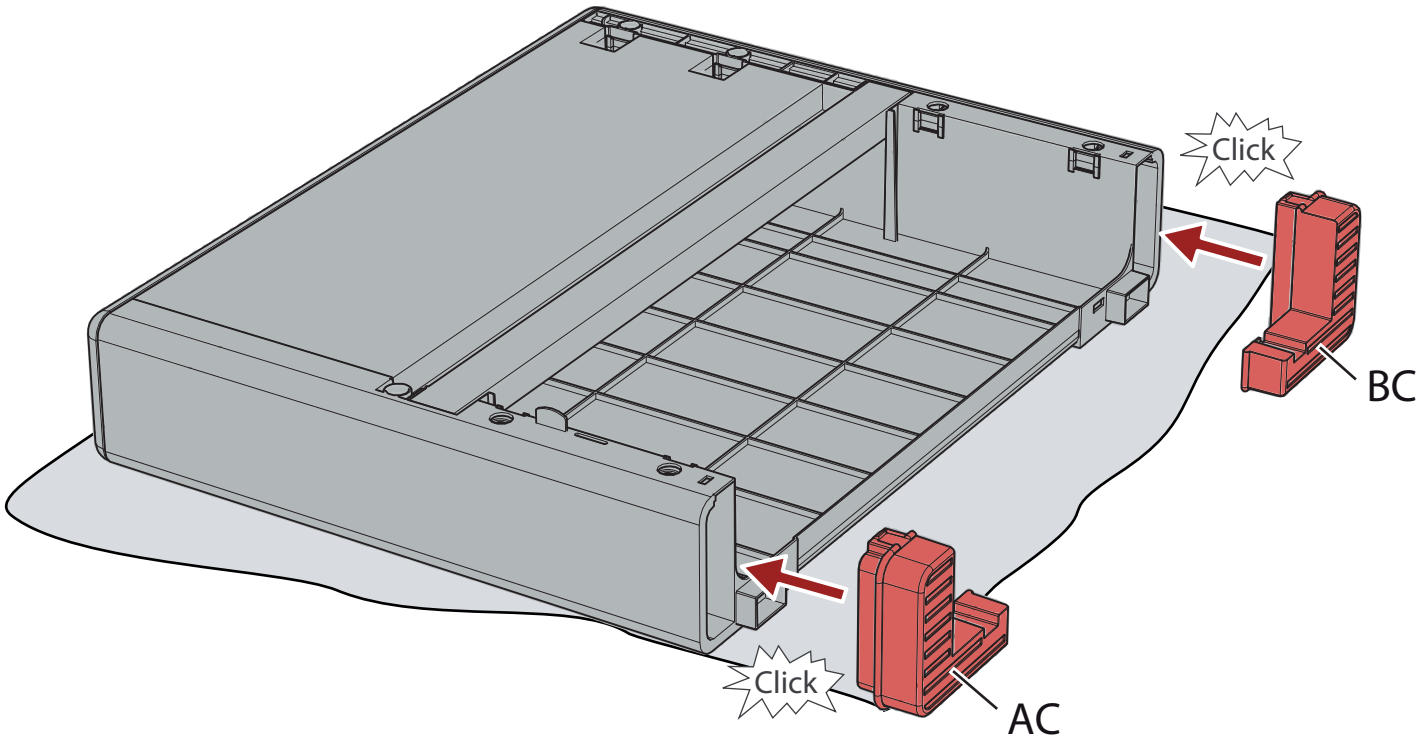


4

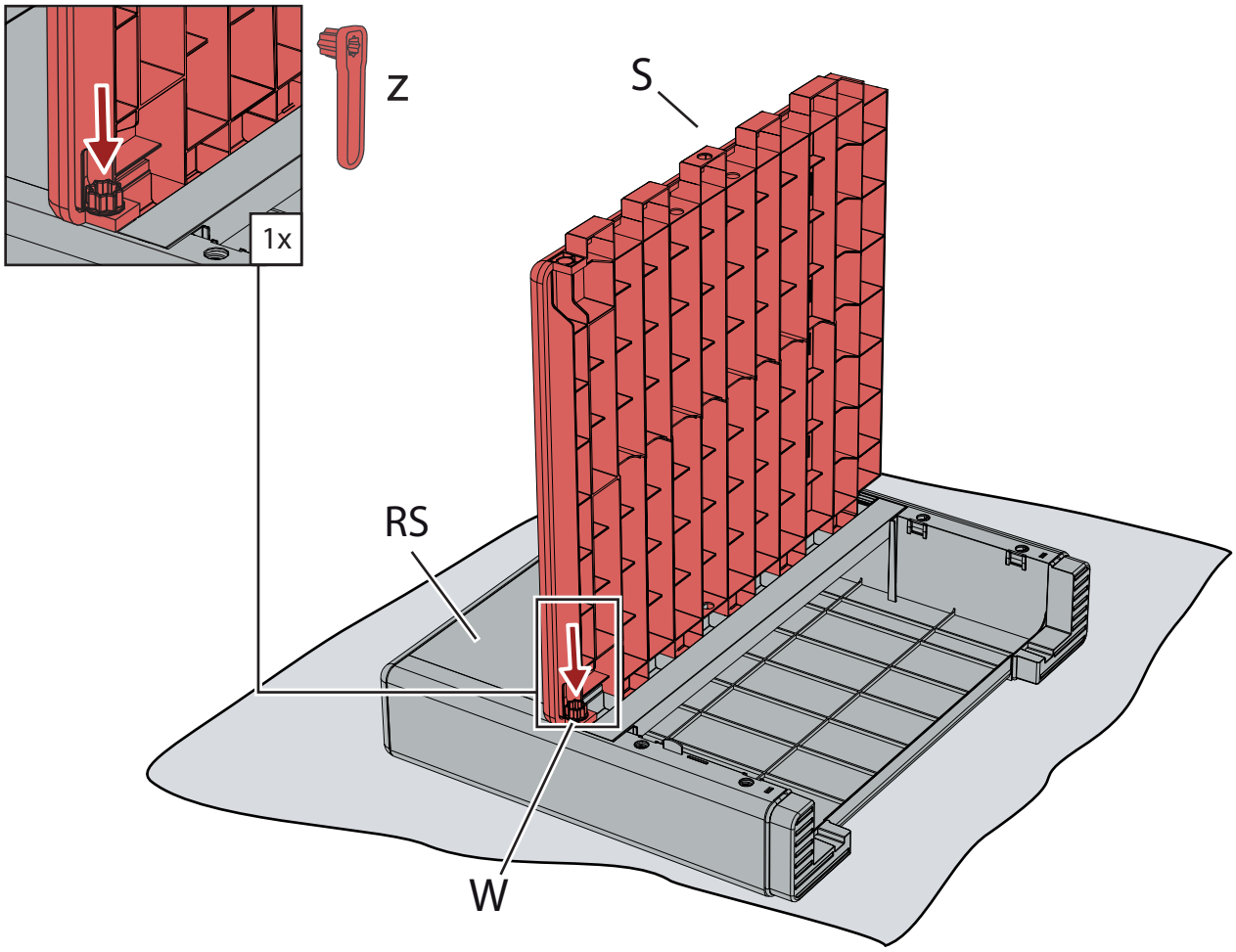


5

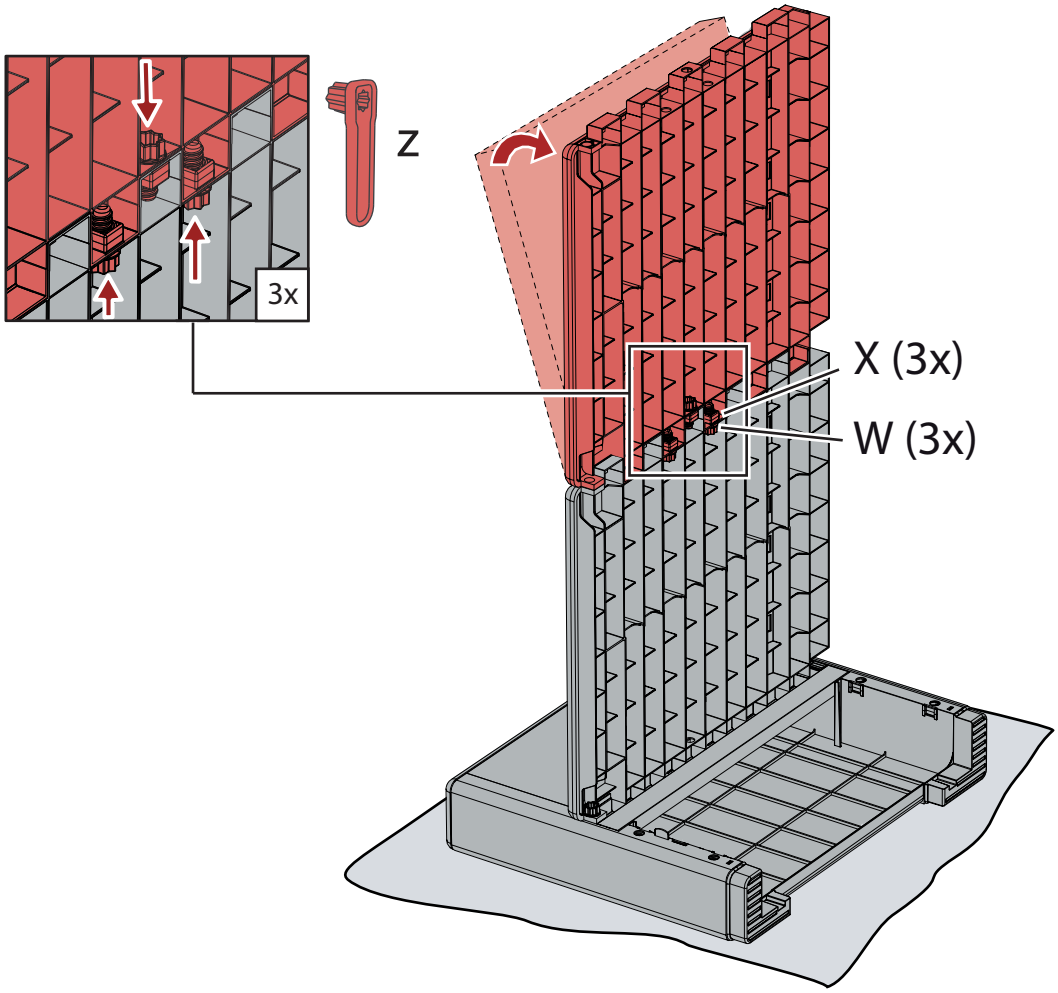


6

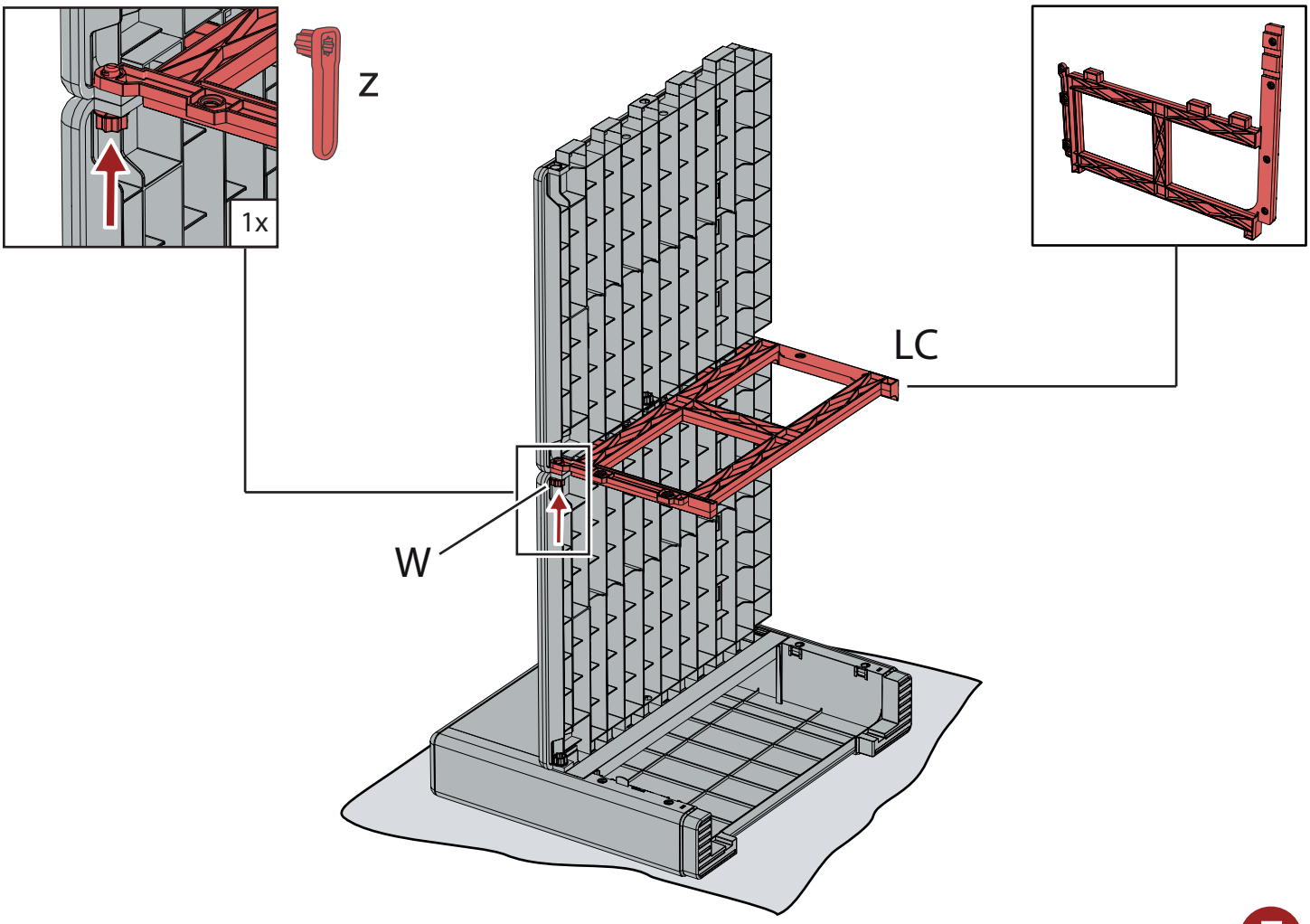


7

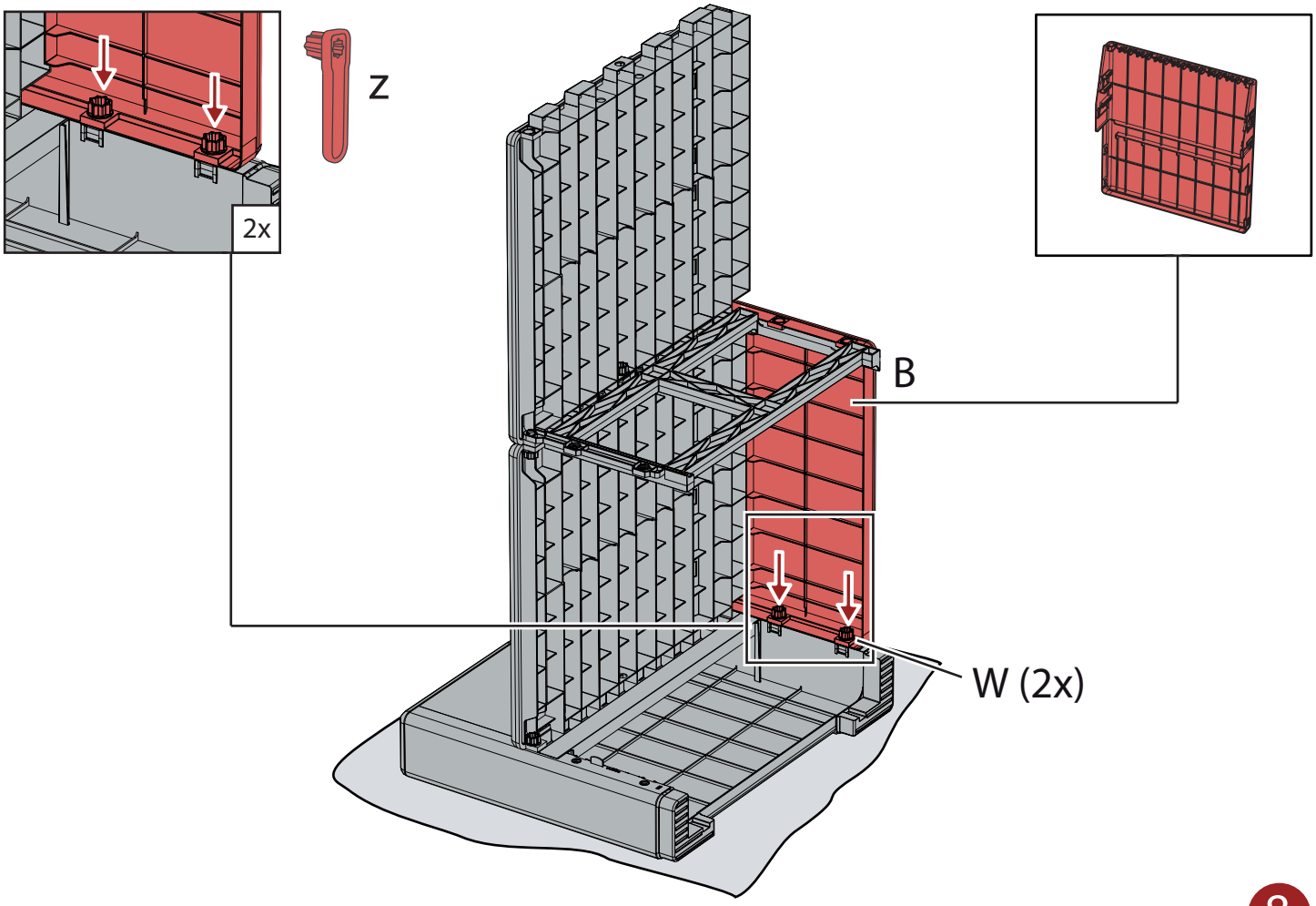


8

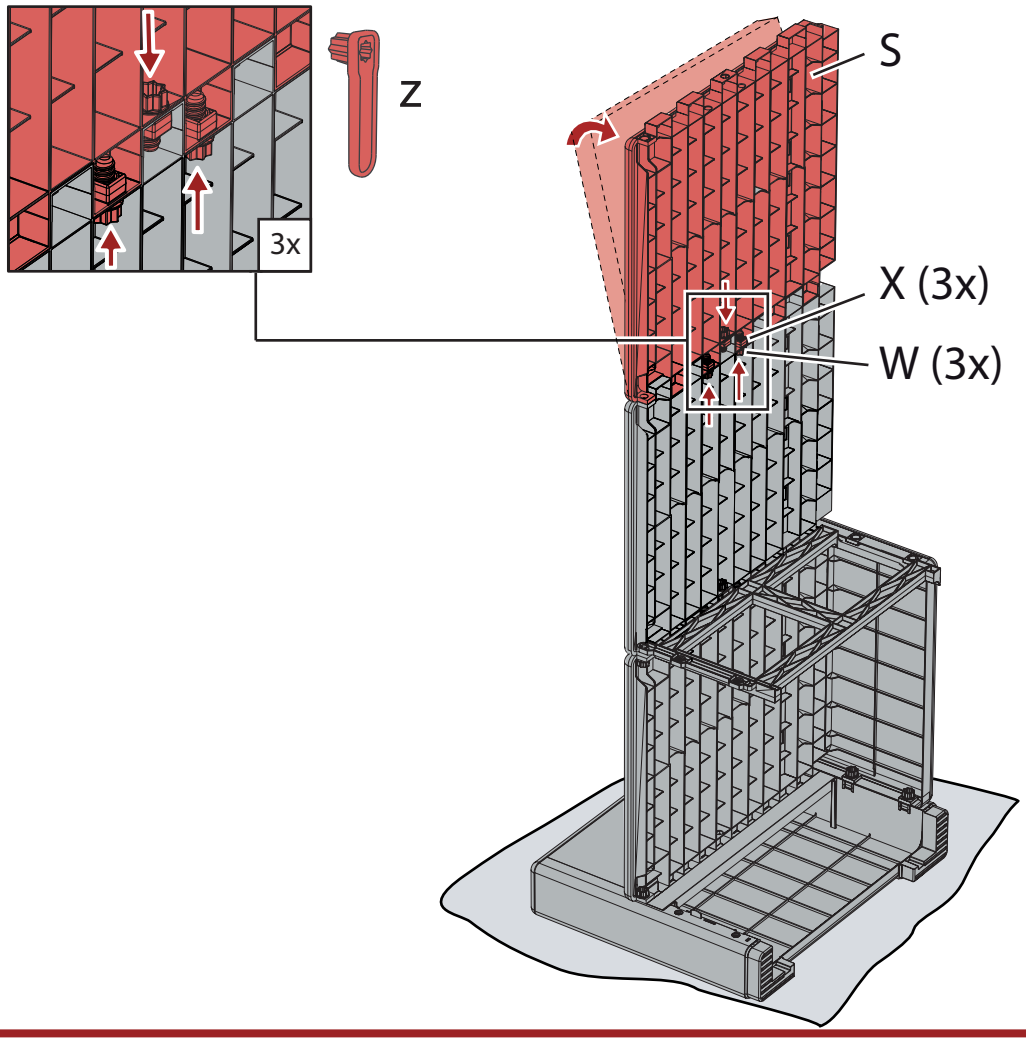


9

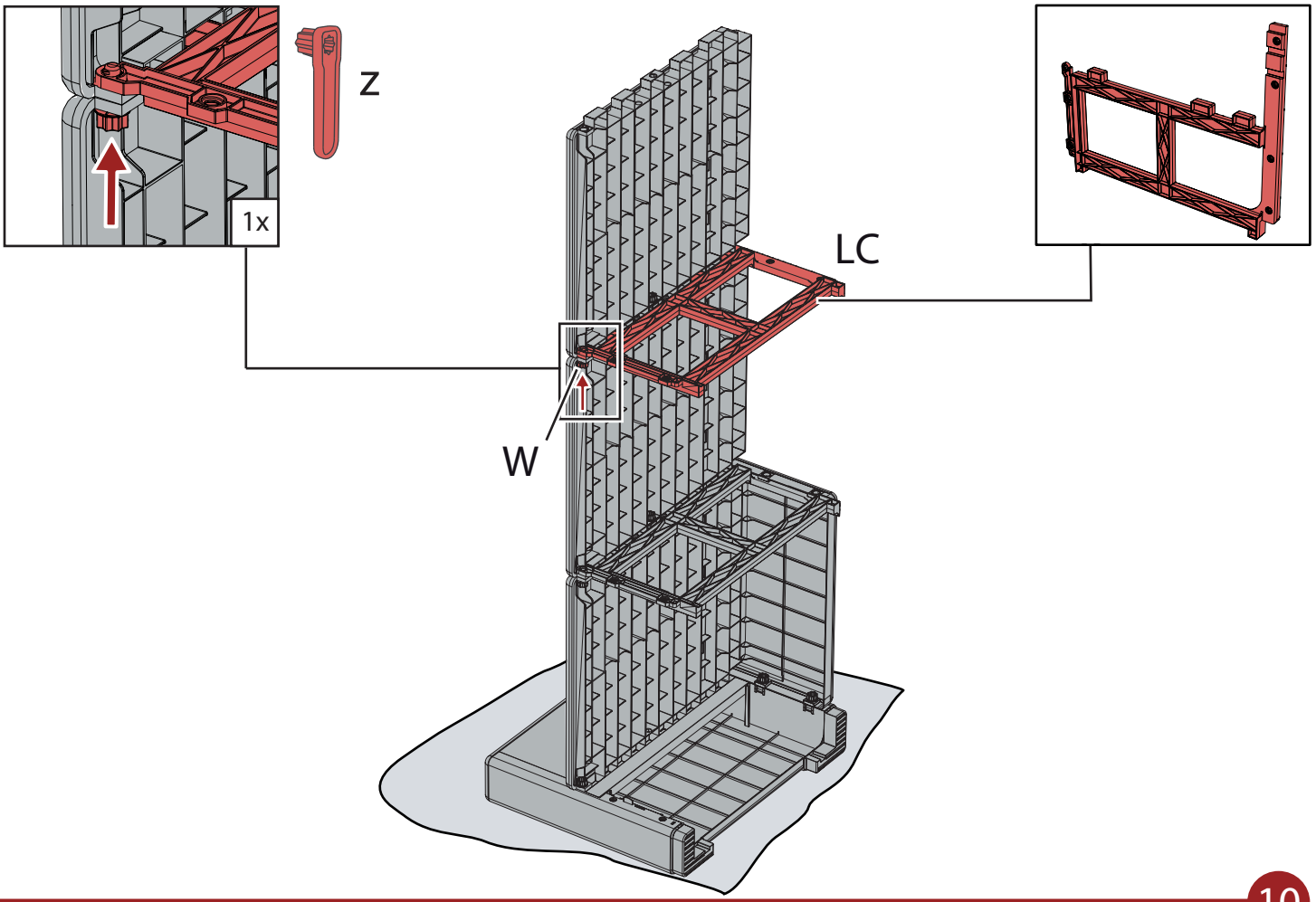


10

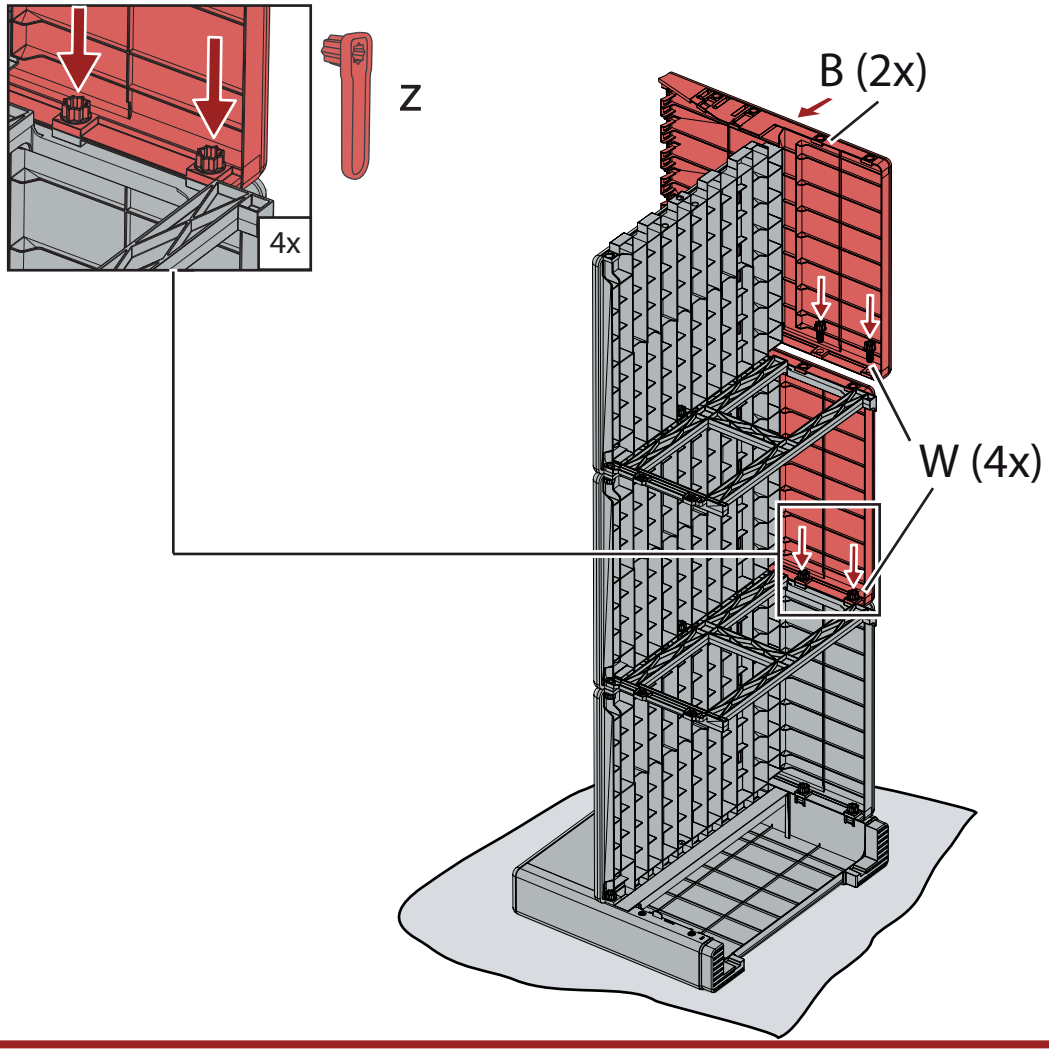


11

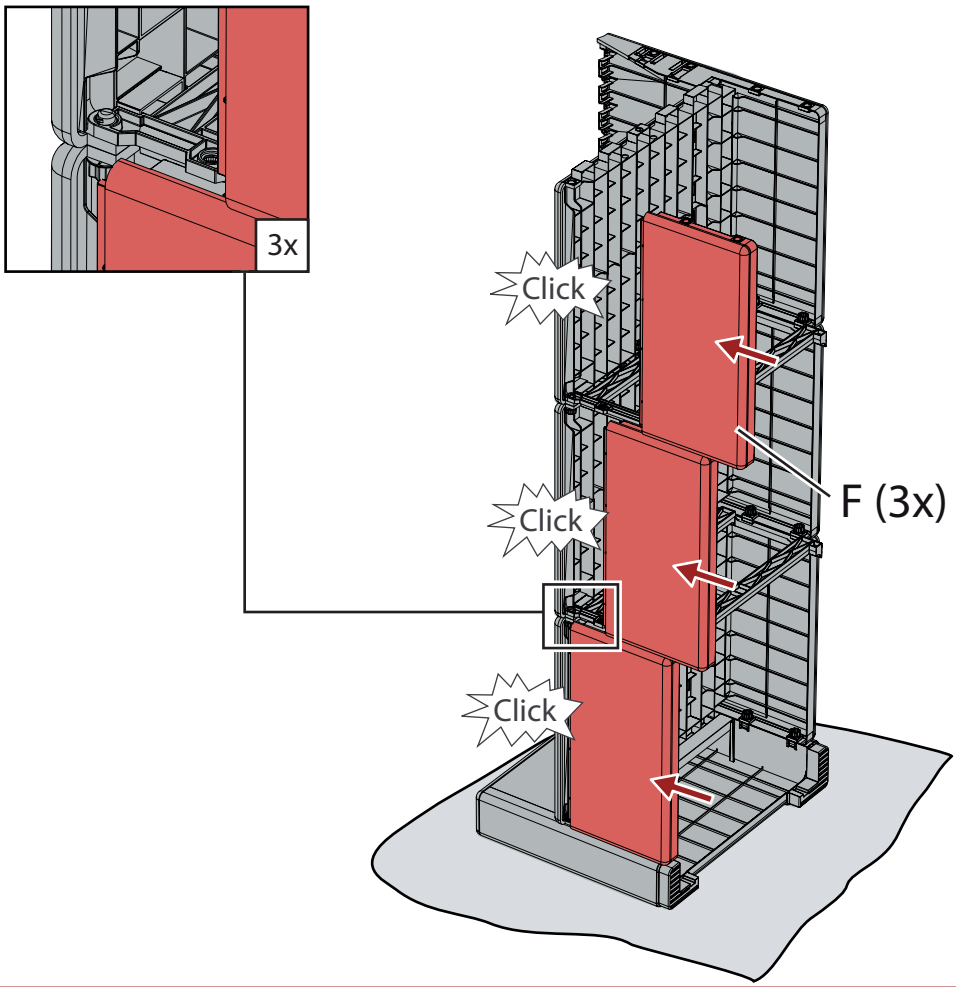


12

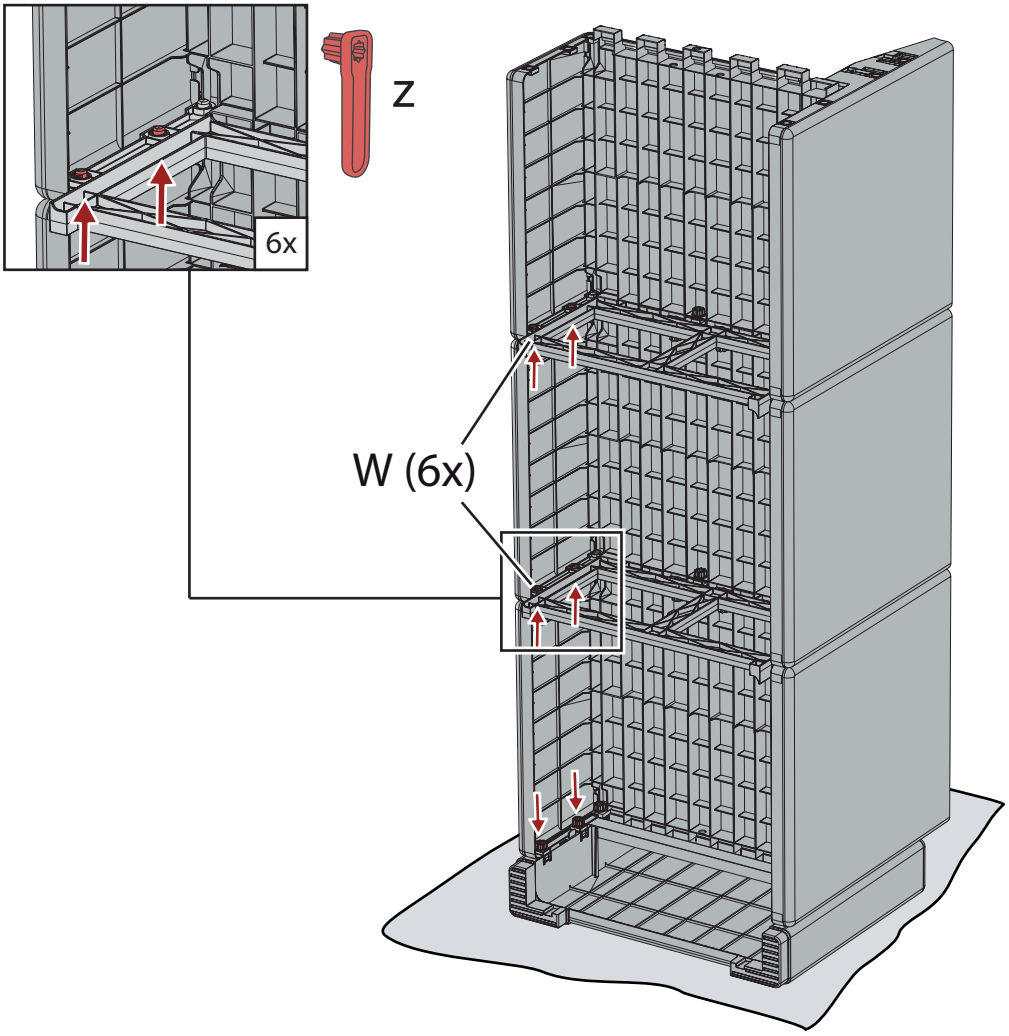
6x
Z
W (6x)



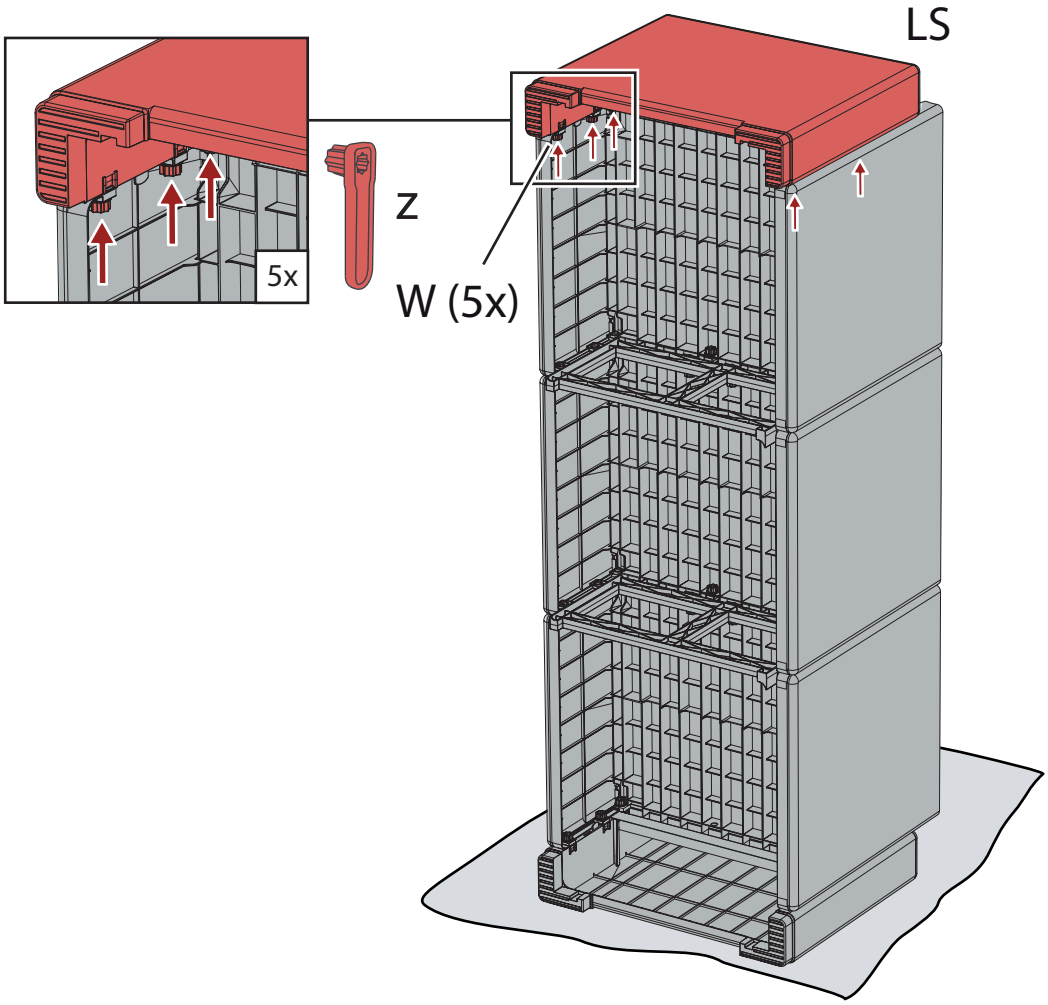
LS
5x
Z
W (5x)

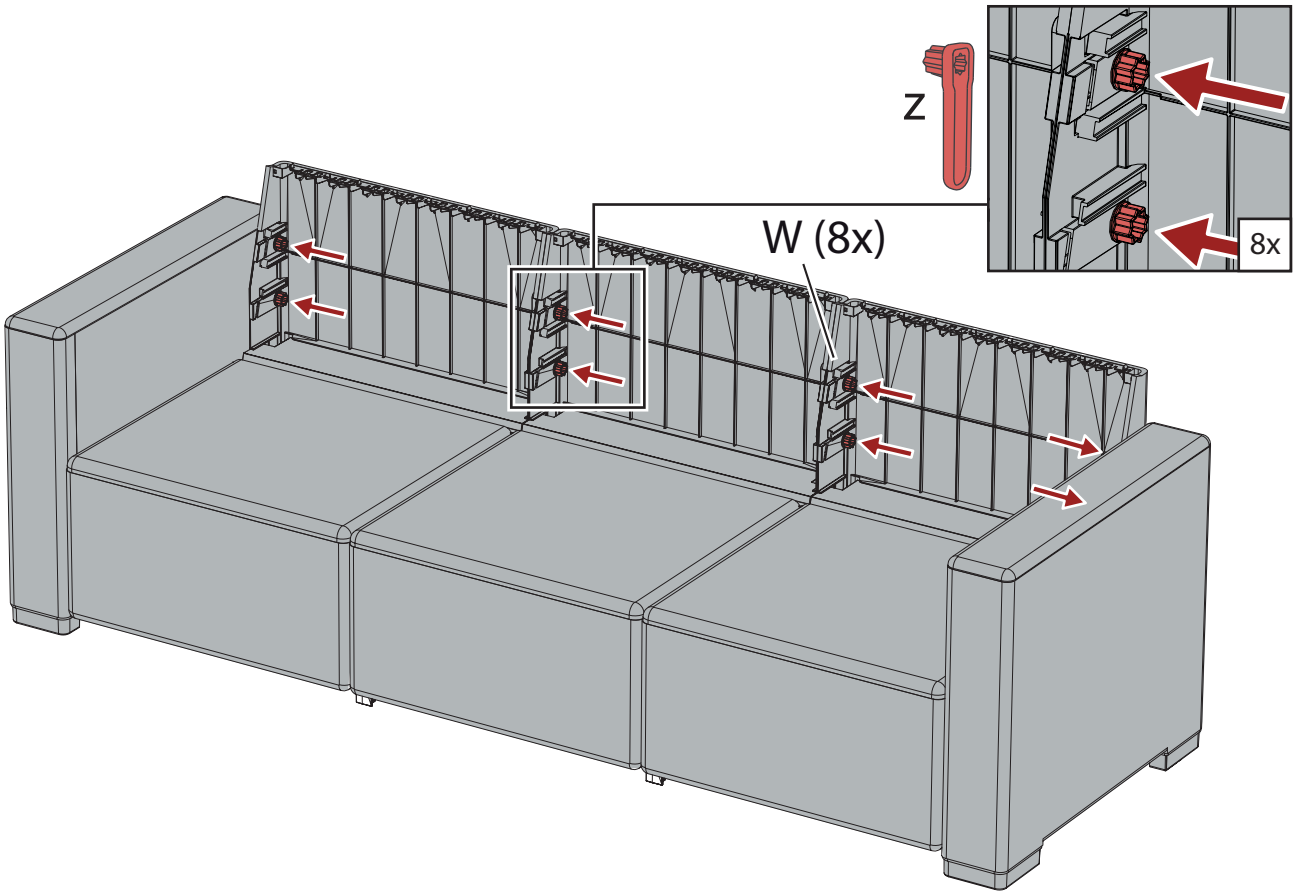


15

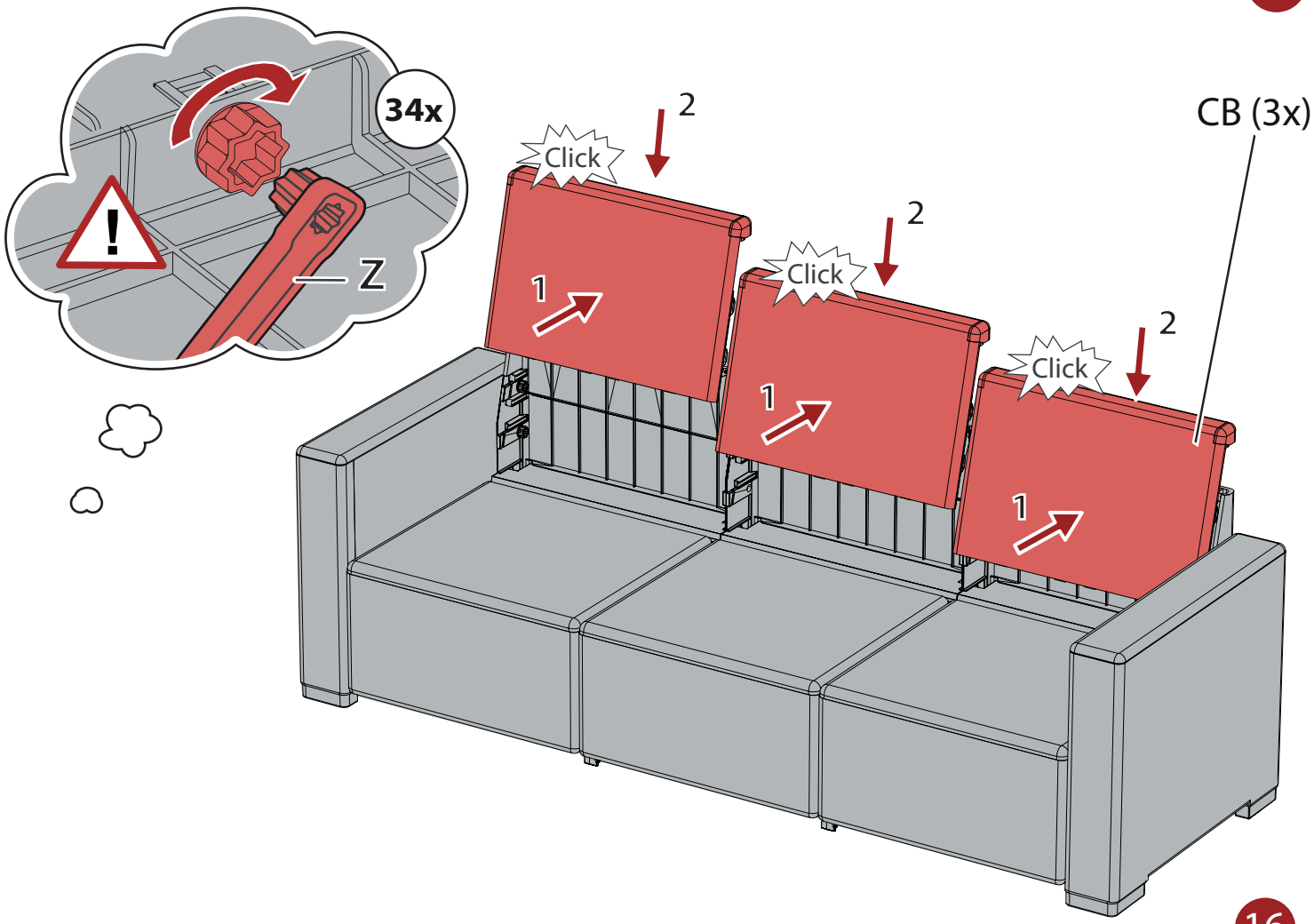

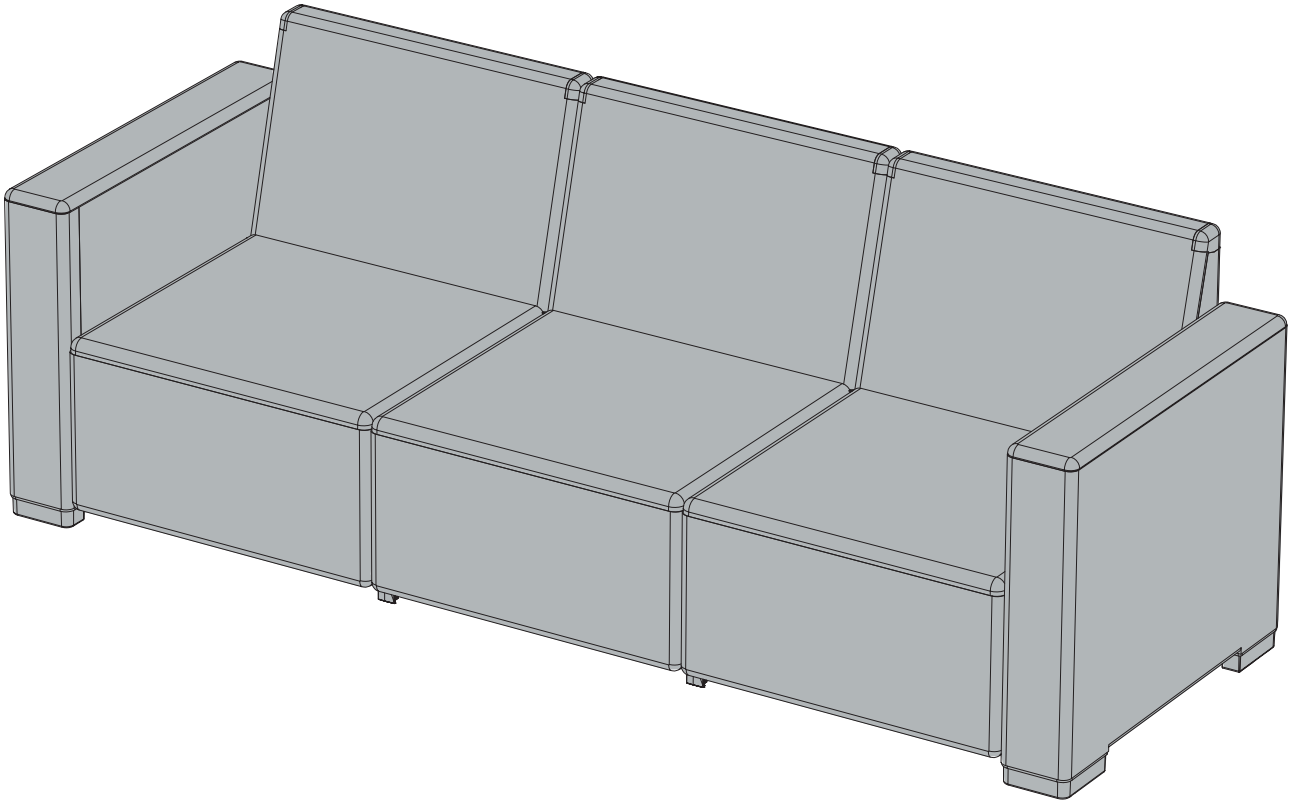
16