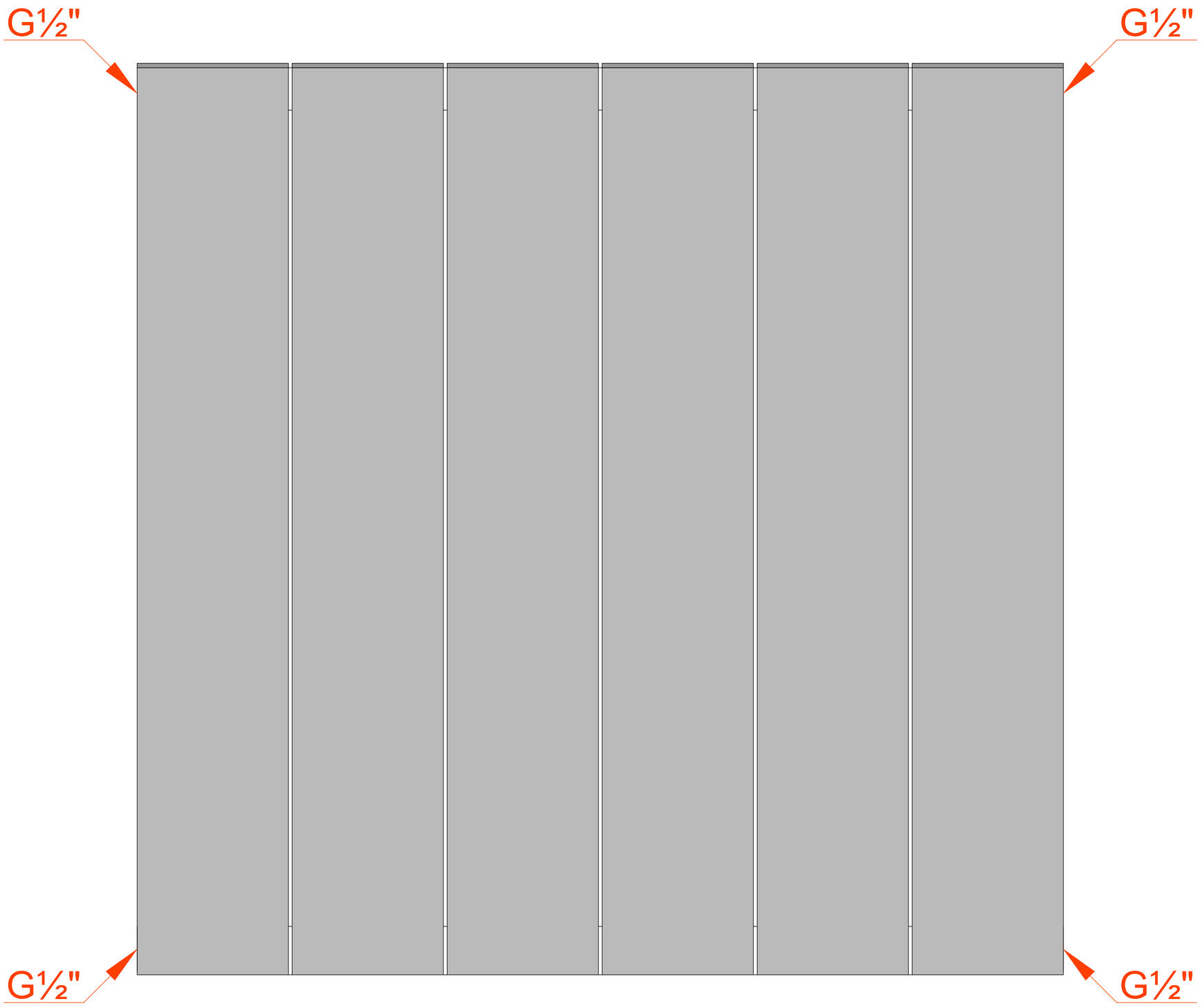

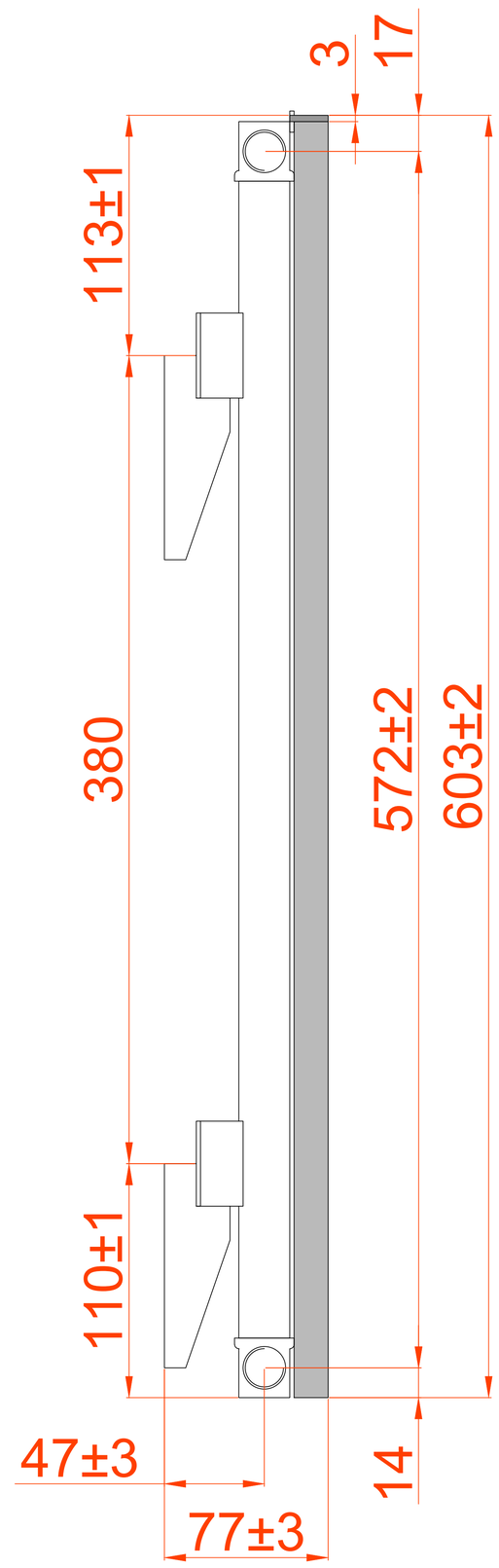

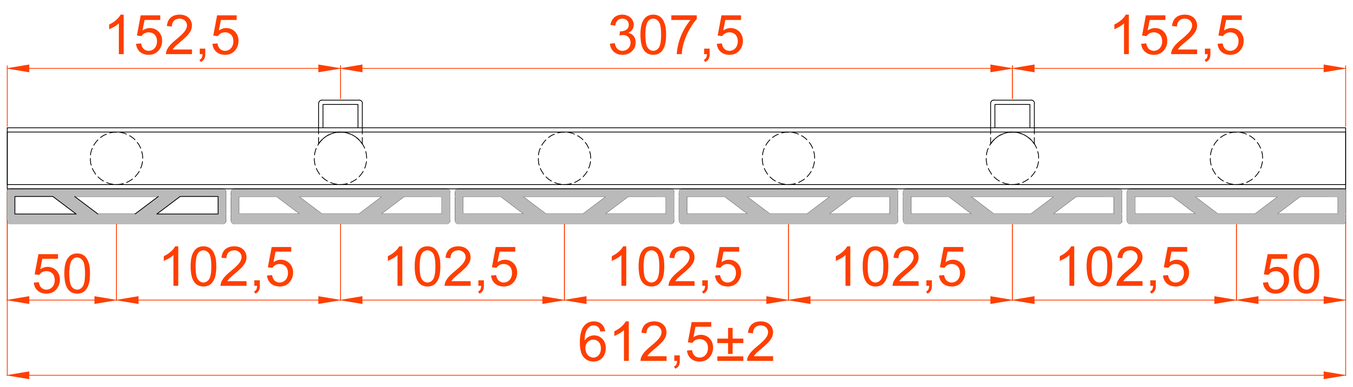

UNCERTAINTY MEASURED TOLERANCES - ISO 2768-1 c								
	0,5mm 3mm	3mm 6mm	6mm 30mm	30mm 120mm	120mm 400mm	400mm 1000mm	1000mm 2000mm	2000mm 4000mm
LINEAR	± 0,2	± 0,3	± 0,5	± 0,8	± 1,2	± 2	± 3	± 4

	DATE	NAME	SIGN
DRAWING	25.03.2021	Sefa FALAY	
CONTROL	25.03.2021	Sefa FALAY	
APPROVAL	25.03.2021	Ferda SAĞIR	

REVISION DESCRIPTION	REV. DATE	REV. DRAWN.	NO.
		CHECHKED	APPROVAL

MATERIAL

PROJECT NAME :

TRENDY - MODEL-2
SINGLE ALUMINUM
612,5x603mm

PIPE DISTRIBUTION
6 PIPES

SCALE 1/1

PROJECT NO

REV. 0