Heating Hot water Renewables

Why Vaillant? Quality accessories create perfect solutions.

hot water association
CHARTER MEMBER

Vaillant

About Vaillant

The Vaillant Group

Vaillant is a brand within the Vaillant Group, a family-owned business that was founded by Johann Vaillant in his workshop in Remscheid, Germany in 1874.

In 1894, Johann patented a new closed-system gas-fired bathroom boiler. Johann's technical innovations continued and in 1924, he launched the world's first central heating boiler. Since these revolutionary inventions, the Vaillant brand has become synonymous with innovative heating solutions and continues to drive the evolution of heating technologies to this day.

The Vaillant Group is still family owned, and the family's consideration for safeguarding the environment for future generations runs through everything that Vaillant does. Vaillant is passionate about developing technologies that use the quality and efficiency of German engineering to create heating solutions that reduce carbon emissions and energy use to help to reduce our impact on the planet.

As the premium brand for sustainable and responsible heating and hot water solutions, it is Vaillant's mission to create a better climate, inside each home and the world around it.

There are now over 13,000 employees across 10 sites around the world who share this vision.

Why Vaillant?

The uniSTOR heat pump cylinder range has been designed to work in harmony with Vaillant heat pumps, to provide highly efficient heating and hot water systems.

A uniSTOR's large surface area and smooth coil design maximises heat transfe, to ensure connected Vailllant heat pumps run at their optimum efficiency. This reduces running costs and increases hot water performance.

Ranging from 150 up to 800 litres, our uniSTOR heat pump cylinders are available in both pre-plumbed (150-300 litres only) and standard options, giving you and your customers even more flexibility. In addition to this, the 250 and 300 litre cylinders have an increased coil size making them compatible with a wider range of ground source heat pump systems.

uniSTOR cylinders have a Global Warming Potential (GWP) of less than five. This is thanks to thermal injected insulation, as well as a 100% recyclable stainless steel tank with an ultra hard-wearing outer shell. These elements of the design contribute to a highly efficient and sustainable heating system.

Choosing your perfect solution

Cylinder compatibility matrix chart

The following cylinder compatibility matrix is provided to help guide you during the specification stages of a renewable heat pump system. Vaillant cylinders provide excellent efficiency, durability and ensure optimum system performance when combined with Vaillant heat pumps. For further information and support, please speak to one of our technical advisors on 0330 100 3540.

aroTHERM air-to-water heat pumps

aroTHERM plus	uniSTOR 150 litre cylinder	uniSTOR 200 litre cylinder	uniSTOR 250 litre cylinder	uniSTOR 300 litre cylinder	uniSTOR 500 litre cylinder	auroSTOR 500 litre cylinder*	uniSTOR 800 litre cylinder
3.5kW	✓	✓					
5kW	✓	✓					
7kW	✓	✓	✓	✓			
10kW		✓	✓	✓	✓		
12kW		✓	✓	✓	✓		✓

aroTHERM split	uniSTOR 150 litre cylinder	uniSTOR 200 litre cylinder	uniSTOR 250 litre cylinder	uniSTOR 300 litre cylinder	uniSTOR 500 litre cylinder	auroSTOR 500 litre cylinder*	uniSTOR 800 litre cylinder
3.5kW	✓	✓					
5kW	✓	✓					
7kW	✓	✓	✓	✓			
10kW		✓	✓	✓	✓		
12kW		✓	✓	✓	✓		✓

aroTHERM	uniSTOR 150 litre cylinder	uniSTOR 200 litre cylinder	uniSTOR 250 litre cylinder	uniSTOR 300 litre cylinder	uniSTOR 500 litre cylinder	auroSTOR 500 litre cylinder*	uniSTOR 800 litre cylinder
5kW	✓	✓					
8kW	✓	✓	✓	✓			
11kW	✓	✓	✓	✓	✓		
15kW		✓	✓	✓	✓		

flexoTHERM ground source heat pumps

flexoTHERM	uniSTOR 150 litre cylinder	uniSTOR 200 litre cylinder	uniSTOR 250 litre cylinder	uniSTOR 300 litre cylinder	uniSTOR 500 litre cylinder	auroSTOR 500 litre cylinder*	uniSTOR 800 litre cylinder
5kW	✓	✓	✓				
8kW		✓	✓	✓		✓	
11kW			✓	✓	✓	✓	
15kW			✓	✓	✓		
19kW							✓

* auroSTOR 500 litre cylinder for combined heat pump and solar thermal systems

Pre-plumbed uniSTOR

The pre-plumbed uniSTOR heat pump cylinder range comes in 200, 250, and 300 litre capacities. The pre-plumbed range is designed to simplify installation and comes with inline connections and a mounting plate for controls, all sized to accommodate the heat pump interface.

Key features and benefits

- **Includes 28mm three-way valve**
  Allows cost saving by reducing number of valves
- **Supplied with expansion vessel and sensor**
  To provide a complete system solution
- **Concealed cable duct**
  Improves aesthetics of wiring from the cylinder and controls
- **Thermodynamically positioned sensor pocket**
  Optimises system performance
- **Large diameter, smooth bore coil technology**
  Provides quiet operation, reduces build-up of scale and aids in long term efficiency through automatic descaling
- **Thermal injected polyurethane insulation combined with vacuum panels**
  Superior insulation and efficiency
- **Global Warming Potential less than five and ozone depletion of zero**
  Designed to have minimal environmental impact
- **Factory fitted immersion heater**
  Emergency backup in case of main heat source failure
- **Automatic air vent included**
  Simplifies installation
- **Adjustable feet**
  Makes on-site installation easier

Pre-plumbed uniSTOR technical specification

Technical data	Unit	200 litre pre-plumbed uniSTOR	250 litre pre-plumbed uniSTOR	300 litre pre-plumbed uniSTOR
Article number		0020237130	0020237131	0020237132
Total tank capacity	l	198.4	249.2	288.7
Actual capacity (without coil volume)	l	190.7	236.3	273.5
Hot water capacity / draw off*	l	172.5	211.0	230.9
Standby losses	kWh/24h	1.2	1.4	1.6
Energy-related products	A+ - F	B	B	B
Reheat time (70%)*	Minutes	14.2	10.6	7.5
Coil rating	kW	26.0	40.7	52.5
Heat exchanger volume	l	7.7	12.9	15.2
Heat exchanger surface	m^2	1.4	2.4	2.8
Primary flow rate	l/h	900	900	900
Heat exchanger pressure drop	mbar	100	170	200
Maximum operating DHW temperature	°C	85	85	85
Maximum operating heat circuit temperature	°C	95	95	95
Quantity of temperature sensor tubes	qty	1	1	1
Size of supplied expansion vessel	l	18	25	25
Immersion heater rating	kW	3.0	3.0	3.0
Immersion heater cable size	mm	1.5	1.5	1.5
Immersion heater current	A	13	13	13

* Calculation from test EN 12897

Dimensions	Unit	200 litre pre-plumbed uniSTOR	250 litre pre-plumbed uniSTOR	300 litre pre-plumbed uniSTOR
Outer diameter with insulation	mm	595	595	595
Height with insulation	mm	1265	1535	1745
Net weight empty cylinder	kg	58.0	73.3	80.6
Weight of filled cylinder	kg	249.4	313.6	369.4
Insulation thickness	mm	50	50	50

Connections	Unit	200 litre pre-plumbed uniSTOR	250 litre pre-plumbed uniSTOR	300 litre pre-plumbed uniSTOR
Primary heat exchanger flow & return connection	BSP female	¾"	¾"	¾"
Cold & hot water connection	BSP female	¾"	¾"	¾"
Temperature sensor sleeve diameter	mm	8	8	8
Immersion heater boss diameter	BSP female	1 ¼"	1 ¼"	1 ¼"

Pre-plumbed uniSTOR

Dimensions

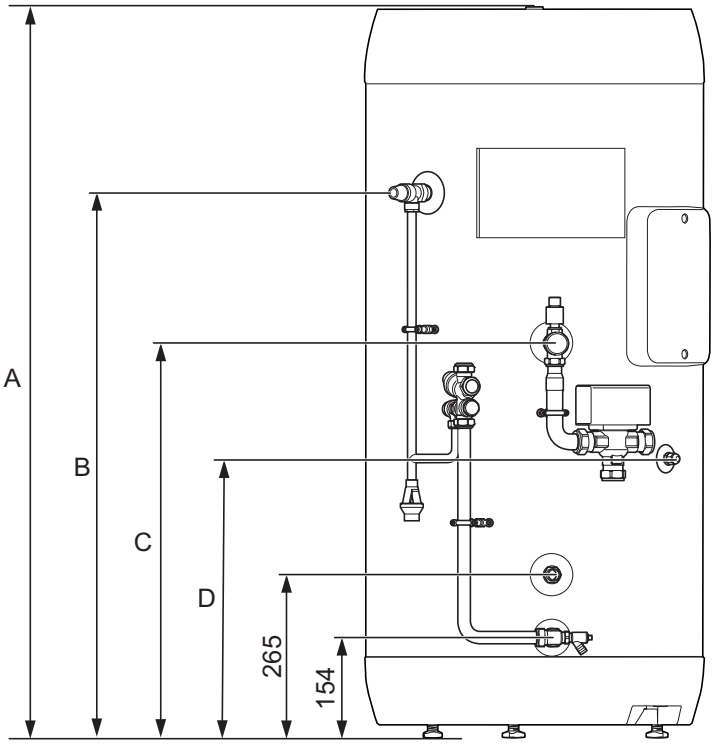

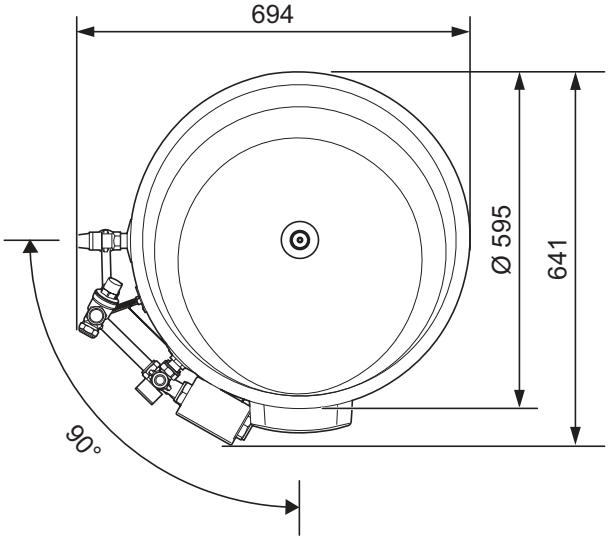

Heat pump cylinder	Unit	A	B	C	D
200 litre pre-plumbed uniSTOR	mm	1,265	940	675	470
250 litre pre-plumbed uniSTOR	mm	1,535	1,210	865	565
300 litre pre-plumbed uniSTOR	mm	1,745	1,420	865	565

Connections

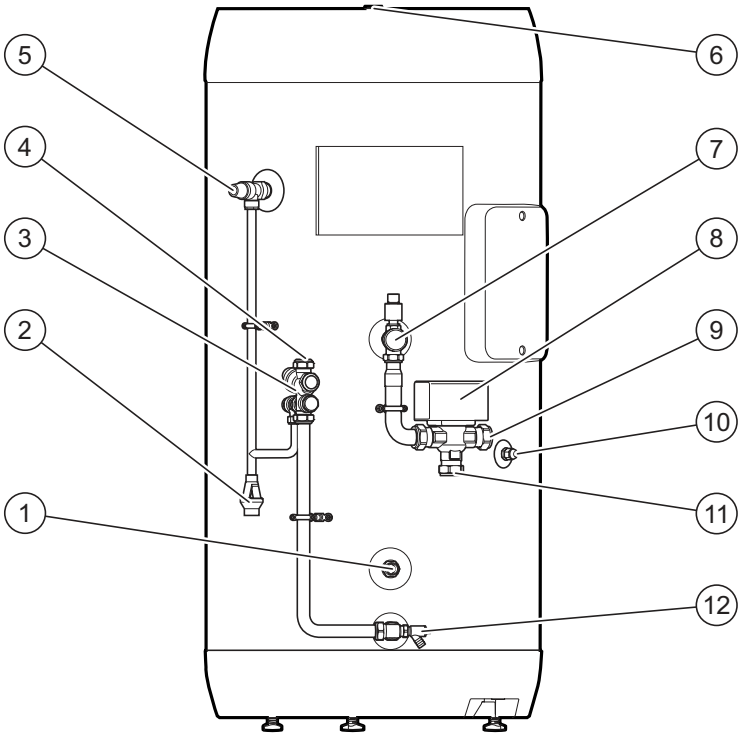

Item	Description
1	Cylinder heating return
2	Tundish
3	Unvented cylinder kit
4	Cold water inlet
5	Temperature and pressure expansion relief valve
6	Hot water outlet
7	Cylinder heating inlet
8	Three-way motorised valve
9	Heating circuit heating flow
10	Cylinder dry pocket for sensor
11	Heating flow from the heat pump
12	Drain valve

NOTE: The expansion vessel is included with the cylinder. The tundish, three-way motorised valve, and unvented cylinder kit are pre-installed on the cylinder.

Pre-plumbed slimline uniSTOR

The pre-plumbed slimline uniSTOR cylinder has been designed with the installer in mind. Its smaller size makes it perfect for space sensitive installations, as well as improving installation times. The cylinder has a specifically designed smooth bore coil, which is purposefully placed to ensure optimum heat transfer within the compact cylinder. The slimline cylinder still offers high performance with a low standby loss of 1.8kW per 24 hours ensuring the hot water stays hot all day long.

Key features and benefits

- **Slim design**
  Fits into compact spaces allowing for flexible siting
- **28mm three-way valve supplied**
  Allows cost saving by reducing number of valves
- **Expansion vessel and sensor included with product**
  Complete system solution offering
- **Concealed cable duct**
  Improves aesthetics of wiring from the cylinder and controls
- **Thermodynamically positioned sensor pocket**
  Optimises system performance
- **Smooth bore coil technology**
  Provides quiet operation, reduces build-up of scale and aids in long term efficiency through automatic descaling
- **Thermal injected polyurethane insulation combined with vacuum panels**
  Superior insulation and efficiency
- **Global Warming Potential less than five and ozone depletion of zero**
  Designed to have minimal environmental impact
- **Factory fitted immersion heater**
  Emergency backup in case of main heat source failure
- **Automatic air vent included**
  Simplifies installation

Pre-plumbed slimline uniSTOR technical specification

Technical data	Unit	150 litre pre-plumbed slimline uniSTOR
Article number		0020237129
Total tank capacity	l	145.1
Actual capacity (without coil volume)	l	139.5
Hot water capacity / draw off*	l	127.0
Standby losses	kWh/24h	1.8
Energy-related Products	A+ - F	C
Reheat time (70%)*	Minutes	12.9
Coil rating	kW	21.7
Heat exchanger volume	l	5.6
Heat exchanger surface	m^2	1.0
Primary flow rate	l/h	900
Heat exchanger pressure drop	mbar	70
Maximum operating DHW temperature	°C	85
Maximum operating heat circuit temperature	°C	95
Quantity of temperature sensor tubes	qty	1
Size of supplied expansion vessel	l	12
Immersion heater rating	kW	3.0
Immersion heater cable size	mm	1.5
Immersion heater current	A	13

* Calculation from test EN 12897

Dimensions	Unit	150 litre pre-plumbed slimline uniSTOR
Outer diameter with insulation	mm	435
Height with insulation	mm	1642
Net weight empty cylinder	kg	54.5
Weight of filled cylinder	kg	193.9
Insulation thickness	mm	40

Connections	Unit	150 litre pre-plumbed slimline uniSTOR
Primary heat exchanger flow & return connection	BSP female	¾"
Cold & hot water connection	BSP female	¾"
Temperature sensor sleeve diameter	mm	8
Immersion heater boss diameter	BSP female	1"

Pre-plumbed slimline uniSTOR

Dimensions

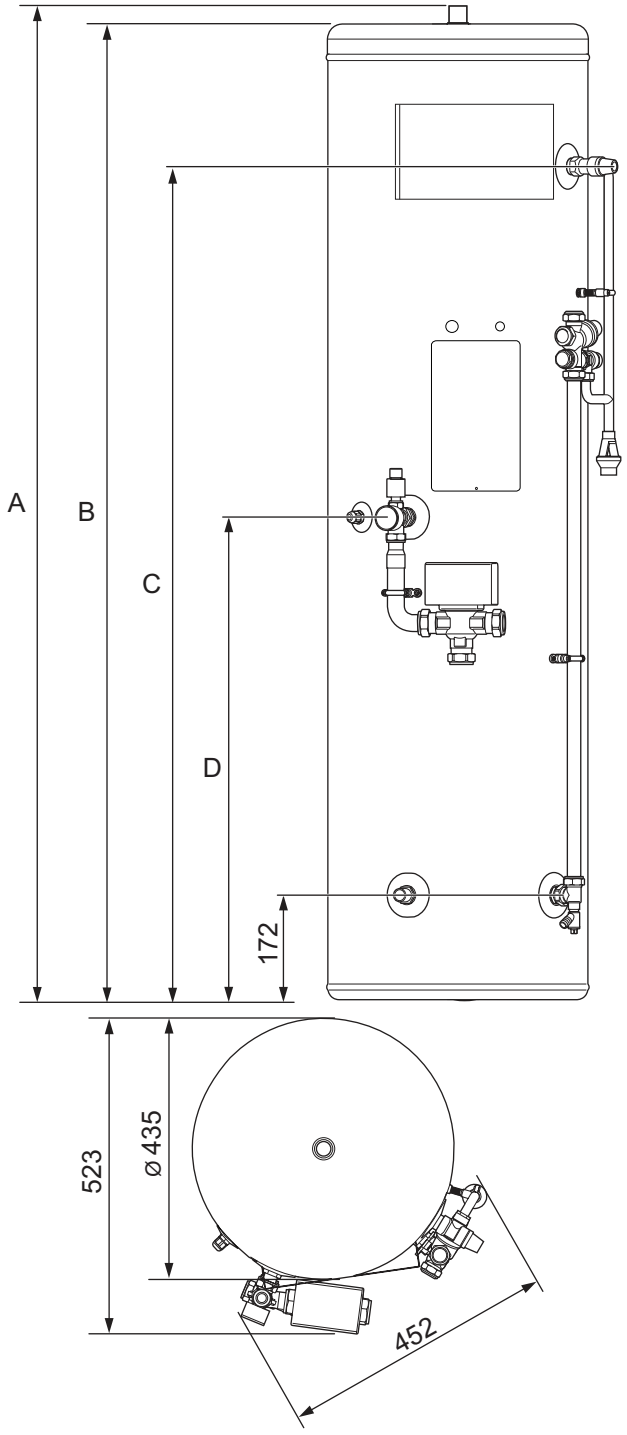

Heat pump cylinder	Unit	A	B	C	D
150 litre pre-plumbed slimline uniSTOR	mm	1,642	1,613	1,377	797

Connections

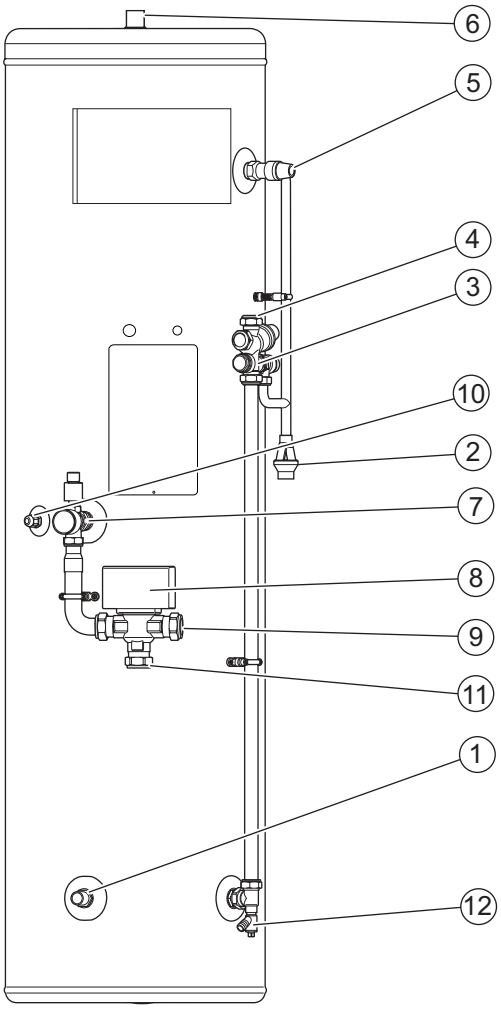

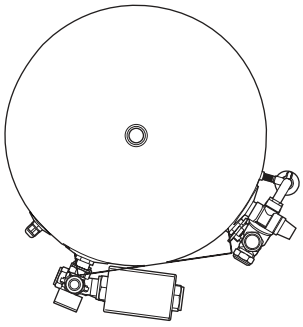

Item	Description
1	Cylinder heating return
2	Tundish
3	Unvented cylinder kit
4	Cold water inlet
5	Temperature and pressure expansion relief valve
6	Hot water outlet
7	Cylinder heating inlet
8	Three-way motorised valve
9	Heating circuit heating flow
10	Cylinder dry pocket for sensor
11	Heating flow from heat pump
12	Drain valve

NOTE: The expansion vessel is included with the cylinder. The tundish, three-way motorised valve, and unvented cylinder kit are pre-installed on the cylinder.

Standard uniSTOR

The standard uniSTOR heat pump cylinder is available in 150, 200, 250, and 300 litres. Each cylinder uses the latest thermal injected insulation for the lowest heat losses in its class, with as little as 1kW per 24 hours. The strategically positioned large diameter smooth bore coil provides optimum hot water performance and automatically de-scales to ensure long term efficient hot water generation.

Key features and benefits

- **Heat loss from as low as 1kW/24 hours**
  Reduce energy bills for end users
- **Thermal injected polyurethane insulation combined with vacuum panels**
  Superior insulation and efficiency
- **28mm three-way valve supplied**
  Reduced cost of installation guarantee
- **Expansion vessel and sensor included**
  Complete system solution offering
- **Concealed cable duct**
  Improves aesthetics of wiring from the cylinder and controls
- **Thermodynamically positioned sensor pocket**
  Optimises system performance
- **Large diameter, smooth bore coil technology**
  Provides quiet operation, reduces build-up of scale and aids in long term efficiency through automatic descaling
- **Thermal injected polyurethane insulation combined with vacuum panels**
  Superior insulation and efficiency
- **Global Warming Potential less than five and ozone depletion of zero**
  Designed around environmental requirements
- **Factory fitted immersion**
  Emergency backup in case of main heat source failure
- **Adjustable feet**
  Makes on-site installation easier

Standard uniSTOR technical specification

Technical data	Unit	150 litre standard uniSTOR	200 litre standard uniSTOR	250 litre standard uniSTOR	300 litre standard uniSTOR
Article number		0020235271	0020235272	0020235273	0020235274
Total tank capacity	l	148.6	198.4	249.2	288.7
Actual capacity (without coil volume)	l	143.8	190.7	236.3	273.5
Hot water capacity / draw off*	l	127.0	172.5	211.0	230.9
Standby losses	kWh/24h	1.0	1.2	1.4	1.6
Energy-related Products	A+ - F	B	B	B	B
Reheat time (70%)*	Minutes	13.8	14.6	10.6	7.5
Coil rating	kW	20.8	26.0	40.7	52.5
Heat exchanger volume	l	5.5	7.7	12.9	15.2
Heat exchanger surface	m^2	1.0	1.4	2.4	2.8
Primary flow rate	l/h	900	900	900	900
Heat exchanger pressure drop	mbar	44	100	170	200
Maximum operating DHW temperature	°C	85	85	85	85
Maximum operating heat circuit temperature	°C	95	95	95	95
Quantity of temperature sensor tubes	qty	1	1	1	1
Size of supplied expansion vessel	l	12	18	25	25
Immersion heater rating	kW	3.0	3.0	3.0	3.0
Immersion heater cable size	mm	1.5	1.5	1.5	1.5
Immersion heater current	A	13	13	13	13

* Calculation from test EN 12897

Dimensions	Unit	150 litre standard uniSTOR	200 litre standard uniSTOR	250 litre standard uniSTOR	300 litre standard uniSTOR
Outer diameter with insulation	mm	595	595	595	595
Height with insulation	mm	975	1265	1535	1745
Net weight empty cylinder	kg	38.0	46.0	61.0	67.6
Weight of filled cylinder	kg	181.3	237.4	301.3	356.8
Insulation thickness	mm	50	50	50	50

Connections	Unit	150 litre standard uniSTOR	200 litre standard uniSTOR	250 litre standard uniSTOR	300 litre standard uniSTOR
Primary heat exchanger flow & return connection	BSP female	¾"	¾"	¾"	¾"
Cold & hot water connection	BSP female	¾"	¾"	¾"	¾"
Temperature sensor sleeve diameter	mm	8	8	8	8
Immersion heater boss diameter	BSP female	1 ¼"	1 ¼"	1 ¼"	1 ¼"

Standard uniSTOR

Dimensions

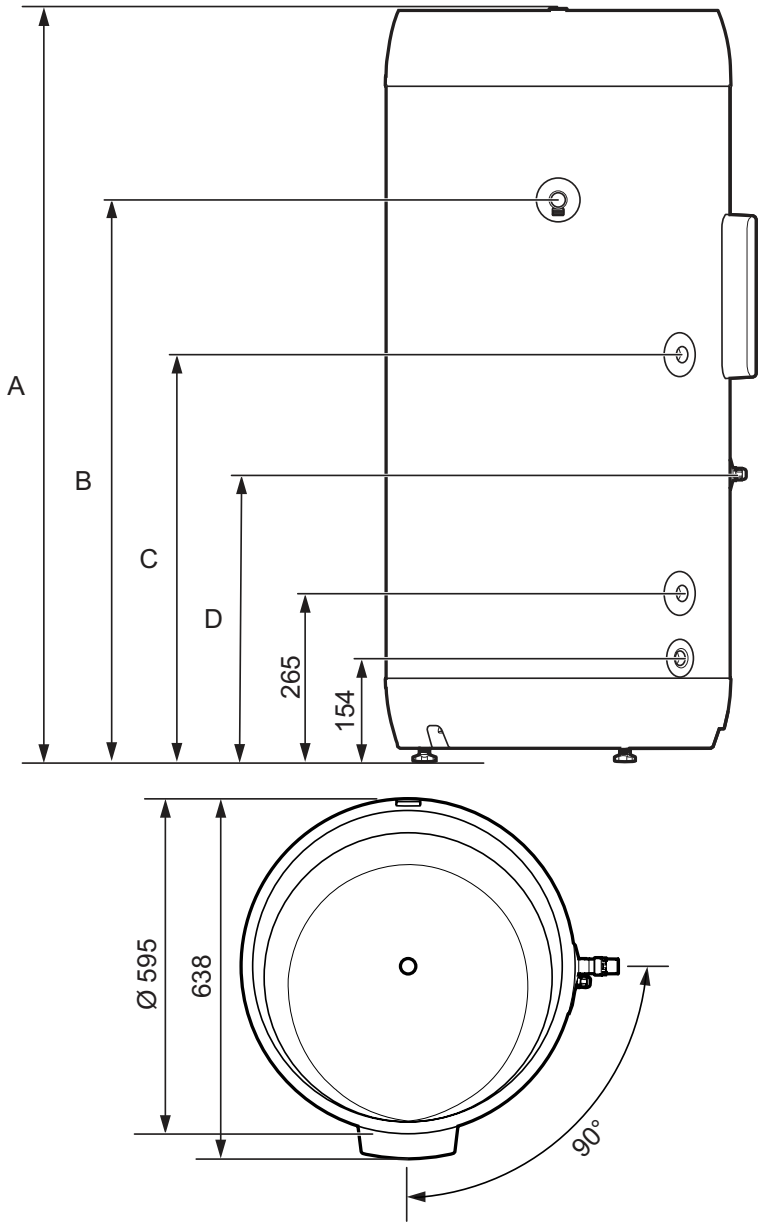

Heat pump cylinder	Unit	A	B	C	D
150 litre standard uniSTOR	mm	1,000	675	520	393
200 litre standard uniSTOR	mm	1,265	940	675	470
250 litre standard uniSTOR	mm	1,535	1,210	865	565
300 litre standard uniSTOR	mm	1,745	1,420	865	565

Connections

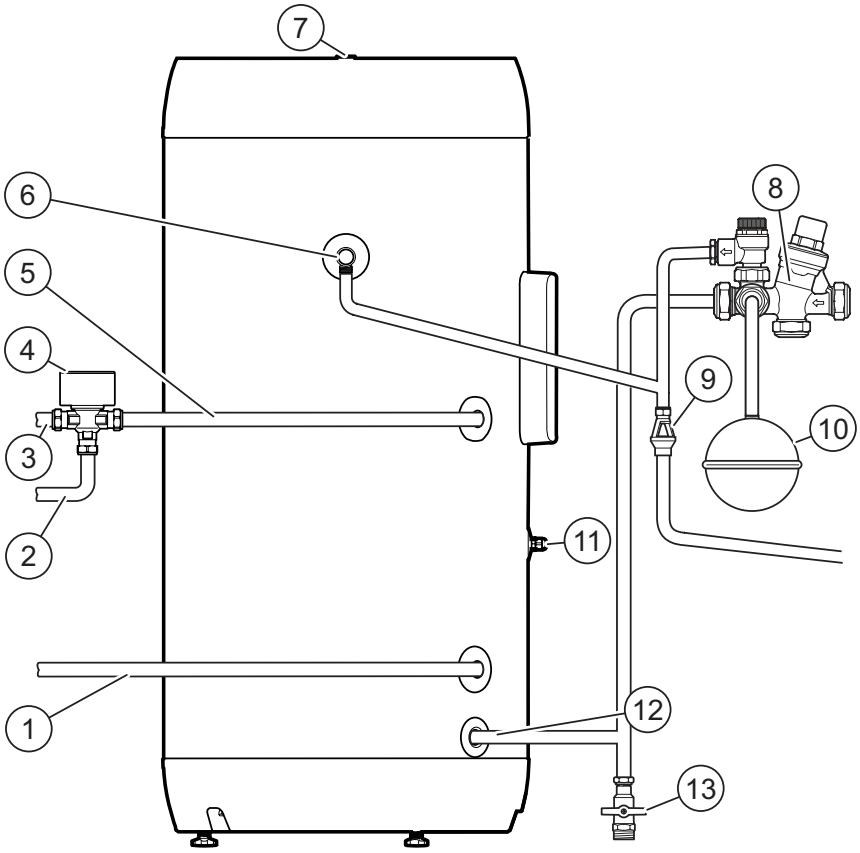

Item	Description
1	Heat pump return
2	Heating flow from heat pump
3	Heating circuit heating flow
4	Three-way motorised valve
5	Cylinder heating inlet
6	Temperature and pressure expansion relief valve
7	Hot water outlet
8	Unvented cylinder kit
9	Tundish
10	Expansion vessel
11	Cylinder dry pocket for sensor
12	Cold water inlet
13	Drain valve

NOTE: Standard uniSTOR cylinders come with tundish, three-way motorised valve, unvented cylinder kit, expansion vessel and 3/4" x 28mm MI-copper compression fitting. The 250 and 300 litre standard uniSTOR comes with secondary return T piece connection.

Large capacity uniSTOR

The Vaillant cylinder range includes two large capacity cylinders and a complete range of accessories. The 500 and 800 litre models have impressive coil sizes, of 4.7m² and 7m² which are manufactured using high grade stainless steel, and pass the highest Vaillant standards and quality control requirements.

In addition, a comprehensive range of accessories are available which includes a choice of unvented cylinder kits, compatible expansion vessels, and a 7.5kW immersion (800 litre only). This provides the installer and specifier with maximum flexibility during design and installation.

Both cylinders can also be easily cascaded to generate higher requirements for hot water. Vaillant's dedicated technical designers can advise on any project for additional support and peace of mind.

Key features and benefits

- **Single guarantee for all components**
  Complete peace of mind from one manufacturer
- **Unvented cylinder kit, expansion vessel and sensor available as an accessory**
  Complete system solution offering whilst meeting all building regulations
- **Large diameter, smooth bore coil technology**
  Provides quiet operation, reduces build-up of scale and aids in long term efficiency through automatic descaling
- **Global Warming Potential less than five and ozone depletion of zero**
  Designed around environmental requirements
- **In-built lifting eye**
  Easy to move over any terrain
- **Secondary return**
  Accommodates complex and larger dwellings
- **Factory fitted T&P valve**
  Ensures safety requirements to meet regulations
- **Large 7.5kW single phase immersion available**
  Emergency backup in case of main heat source failure (800 litre only)
- **Inspection port included**
  Meets requirement of many commercial specifications (800 litre only)

Large capacity uniSTOR technical specification

Technical data	Unit	500 litre uniSTOR	800 litre uniSTOR
Article number		0010019228	0010019229
Total tank capacity	l	541.4	784.0
Actual capacity (without coil volume)	l	512.0	740.0
Hot water capacity / draw off*	l	460.0	635.0
Standby losses	kWh/24h	2.5	3.0
Energy-related Products	A+ - F	C	C
Reheat time (70%)*	Minutes	20.0	18.3
Coil rating at 15 litres per minute*	kW	36.2	54.3
Coil rating at 30 litres per minute*	kW	50.5	74.5
Coil rating at 60 litres per minute*	kW	71.4	104.7
Heat exchanger volume	l	29.0	44.0
Heat exchanger surface	m^2	4.7	7.0
Primary flow rate	l/h	1800	1800
Heat exchanger pressure drop at 15 litres per minute	bar	0.02	0.006
Heat exchanger pressure drop at 30 litres per minute	bar	0.03	0.02
Heat exchanger pressure drop at 60 litres per minute	bar	0.2	0.1
Peak performance of heat pump (10 minutes) at 60°C	l	656	953
Peak performance of heat pump (10 minutes) at 40°C	l	1093	1588
Peak performance of heat pump (60 minutes) at 60°C	l	1380	2021
Peak performance of heat pump (60 minutes) at 40°C	l	2300	3368
Peak performance of boiler (10 minutes) at 60°C	l	860	1249
Peak performance of boiler (10 minutes) at 40°C	l	1433	2081
Peak performance of boiler (60 minutes) at 60°C	l	1584	2317
Peak performance of boiler (60 minutes) at 40°C	l	2640	3861
Maximum operating DHW temperature	°C	85	85
Maximum operating heat circuit temperature	°C	95	95
Quantity of temperature sensor tubes	qty	2	2
Size of expansion vessel	l	50 (supplied as accessory)	80 (supplied as accessory)
Immersion heater rating	kW	5.0	7.5
Immersion heater cable size	mm	4.0	6.0
Immersion heater current	A	32	40

* Calculation from test EN 12897
NOTE: Calculated figures are based on the heat pump flow temperature of 60°C and boiler flow temperatures of 80°C

Dimensions	Unit	500 litre uniSTOR	800 litre uniSTOR
Outer diameter with insulation	mm	785	986
Height with insulation	mm	1.9	1.9
Net weight empty cylinder	kg	140	231
Weight of filled cylinder	kg	690	1015
Insulation thickness	mm	65	100

Connections	Unit	500 litre uniSTOR	800 litre uniSTOR
Primary heat exchanger flow & return connection	BSP female	1 ½"	1 ½"
Cold & hot water connection	BSP female	1 ½"	1 ½"
Temperature sensor sleeve diameter	mm	8	8
Immersion heater boss diameter	BSP female	1 ¼"	1 ¼"

Large capacity uniSTOR

Dimensions

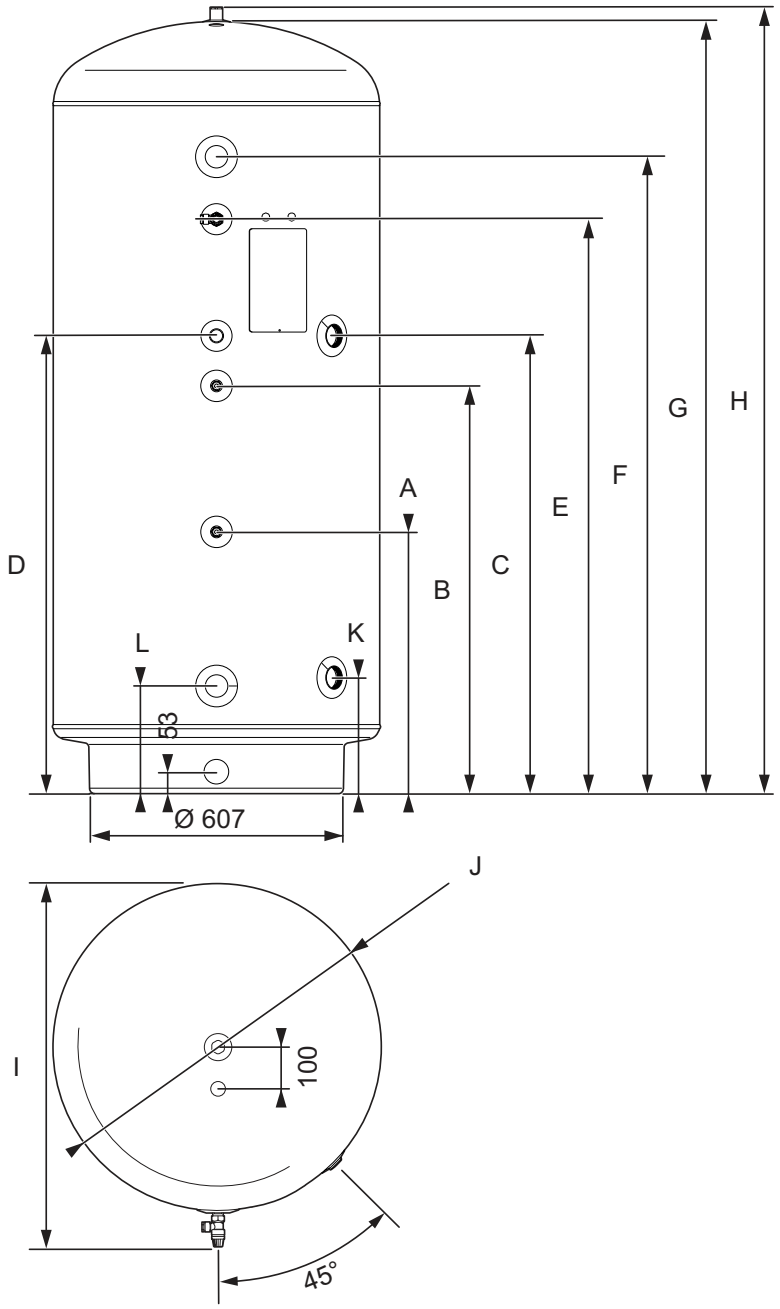

Heat pump cylinder	Unit	A	B	C	D	E	F	G	H	I	J	K	L
500 litre uniSTOR	mm	649	979	1,099	1,099	1,379	1,529	1,853	1,886	872	785	279	259
800 litre uniSTOR	mm	745	1,180	1,130	1,280	1,381	1,480	1,872	1,905	1,071	986	310	310

Connections

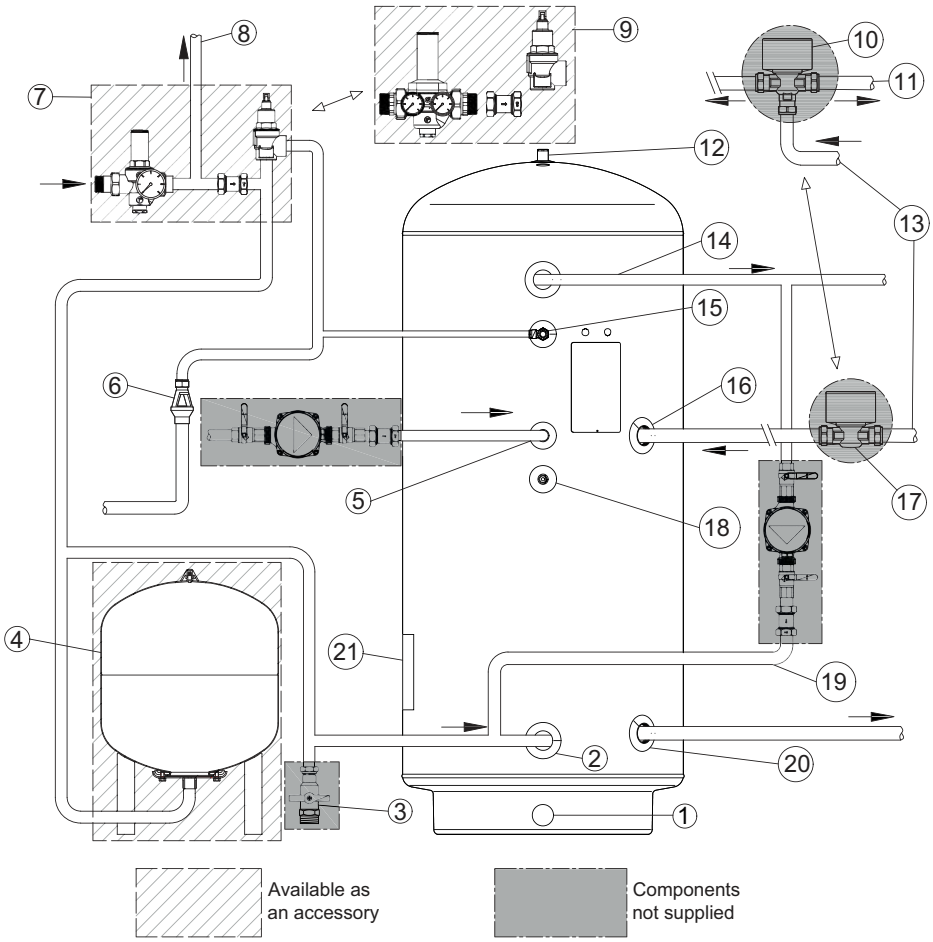

Item	Description
1	Cylinder drain
2	Cold water inlet
3	System drain valve (not supplied)
4	Expansion vessel
5	Secondary circulation (not supplied)
6	Tundish
7	Safety group (available as an accessory)
8	Balanced cold water
9	2" Safety group supplied with additional pressure gauge
10	Heat pump connection method: three-way motorised diverter valve (not supplied)
11	Heating circuit heating flow
12	Non-removable lifting eye (manual vent behind lifting eye)
13	Heating flow from heat source
14	Domestic hot water outlet
15	Temperature-pressure relief valve
16	Cylinder heating flow
17	Boiler connection method: motorised valve (not supplied)
18	Temperature sensor pocket
19	Legionella protection loop (not supplied)
20	Cylinder heating return
21	Inspection hatch (800 litre only)

NOTE: Large capacity auroSTOR cylinders come with a tundish. Unvented cylinder kits and expansion vessels are available in a range of sizes as accessories (see page 26).

Large capacity auroSTOR

The large capacity 500 litre twin coil auroSTOR cylinder has been specifically designed to accommodate both a heat pump and solar thermal system. The 500 litre twin coil auroSTOR cylinder utilises two smooth coils to ensure a quick heat recovery and prolonged life, due to its automatic de-scaling properties.

auroSTOR has a multitude of accessories to complete the Vaillant system including a choice of unvented cylinder kits and a compatible expansion vessel.

auroSTOR completes a Vaillant renewable system by enabling solar thermal options.

Key features and benefits

- **Single guarantee for all components**
  Complete peace of mind from one manufacturer
- **Unvented cylinder kit, expansion vessel and sensor available as an accessory**
  Complete system solution offering whilst meeting all building regulations
- **Large diameter, smooth bore coil technology**
  Provides quiet operation, reduces build-up of scale and aids in long term efficiency through automatic descaling
- **Global Warming Potential less than 5 and ozone depletion of 0**
  Designed around environmental requirements
- **Secondary return**
  Accommodates complex and larger dwellings
- **Multiple sizes of unvented cylinder kit available**
  Accommodates all common pipes sizes
- **Factory fitted T&P valve**
  Ensures safety requirements to meet regulations
- **Factory fitted immersion heater**
  Emergency backup in case of main heat source failure

Large capacity auroSTOR technical specification

Technical data	Unit	500 litre auroSTOR
Article number		0010019234
Total tank capacity	l	541.4
Actual capacity (without coil volume)	l	510.0
Hot water capacity / draw off*	l	248.0/438.0
Standby losses	kWh/24h	2.6
Energy-related Products	band	C
Reheat time (70%)*	minutes	13.8 (upper) / 48.8 (lower)
Coil rating at 15 litres per minute	kW	35.0 (upper) / 19.2 (lower)
Coil rating at 30 litres per minute	kW	52.3 (upper) / 29.8 (lower)
Coil rating at 60 litres per minute	kW	77.2 (upper) / 39.9 (lower)
Heat exchanger volume	l	23.0 (upper) / 8.0 (lower)
Heat exchanger surface	m^2	2.3 (upper) / 1.0 (lower)
Primary flow rate	l/h	900
Heat exchanger pressure drop at 15 litres per minute	bar	0.01 (upper and lower)
Heat exchanger pressure drop at 30 litres per minute	bar	0.03 (upper and lower)
Heat exchanger pressure drop at 60 litres per minute	bar	0.1 (upper and lower)
Maximum operating DHW temperature	°C	85
Maximum operating heat circuit temperature	°C	95
Quantity of temperature sensor tubes	qty	2
Size of expansion vessel	l	50 (supplied as an accessory)
Immersion heater rating	kW	5.0
Immersion heater cable size	mm	4.0
Immersion current	A	32

* Calculation from test EN 12897

Dimensions	Unit	500 litre auroSTOR
Outer diameter with insulation	mm	785
Height with insulation	mm	1.9
Net weight empty cylinder	kg	155
Weight of filled cylinder	kg	705
Insulation thickness	mm	65

Connections	Unit	500 litre auroSTOR
Primary heat exchanger flow & return connection	BSP female	1 ½"
Cold & hot water connection	BSP female	1 ½"
Temperature sensor sleeve diameter	mm	8
Immersion heater boss diameter	BSP female	1 ¼"

Large capacity auroSTOR

Dimensions

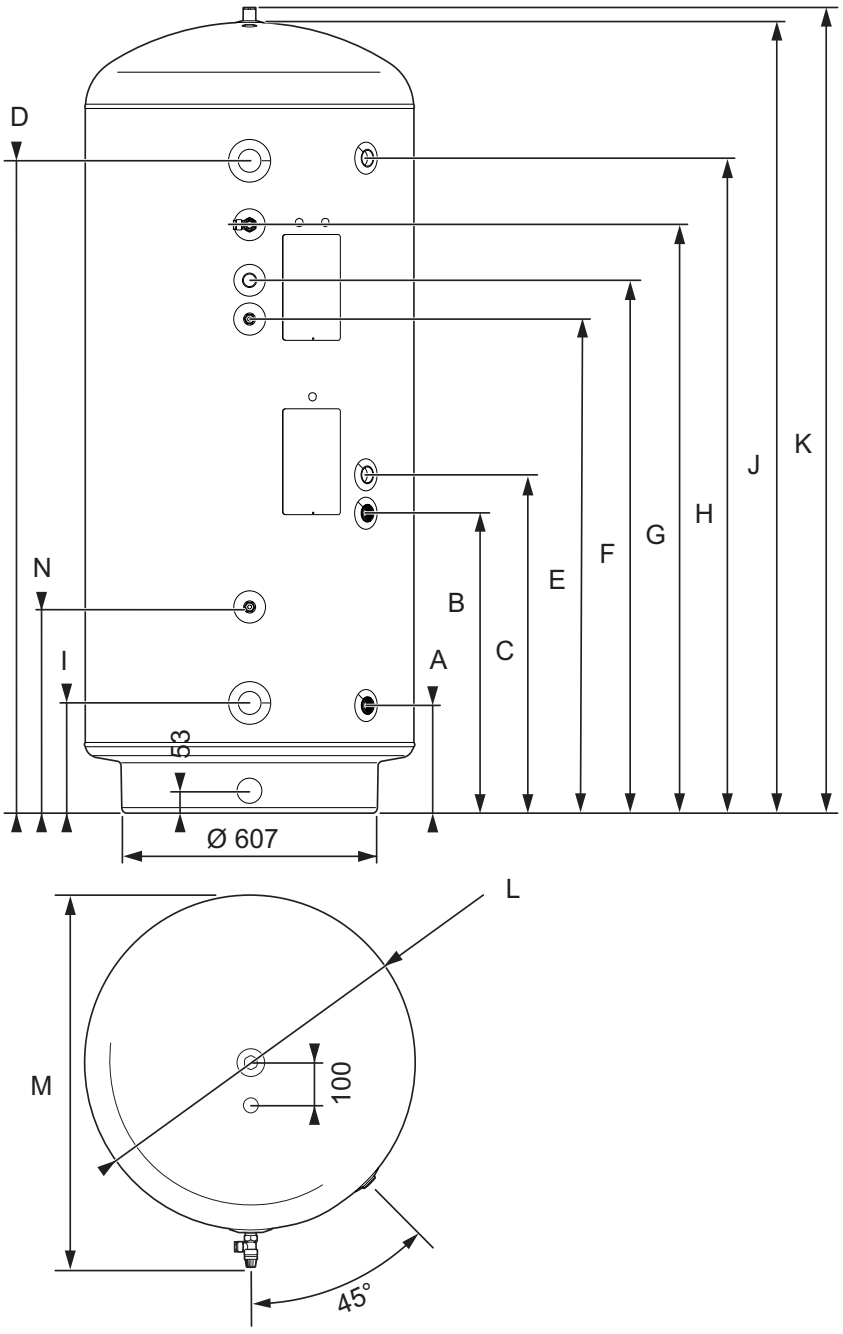

Heat pump cylinder	Unit	A	B	C	D	E	F	G	H	I	J	K	L	M	N
500 litre auroSTOR	mm	252	703	793	1,529	1,158	1,249	1,379	1,529	259	1,853	1,886	785	872	484

Connections

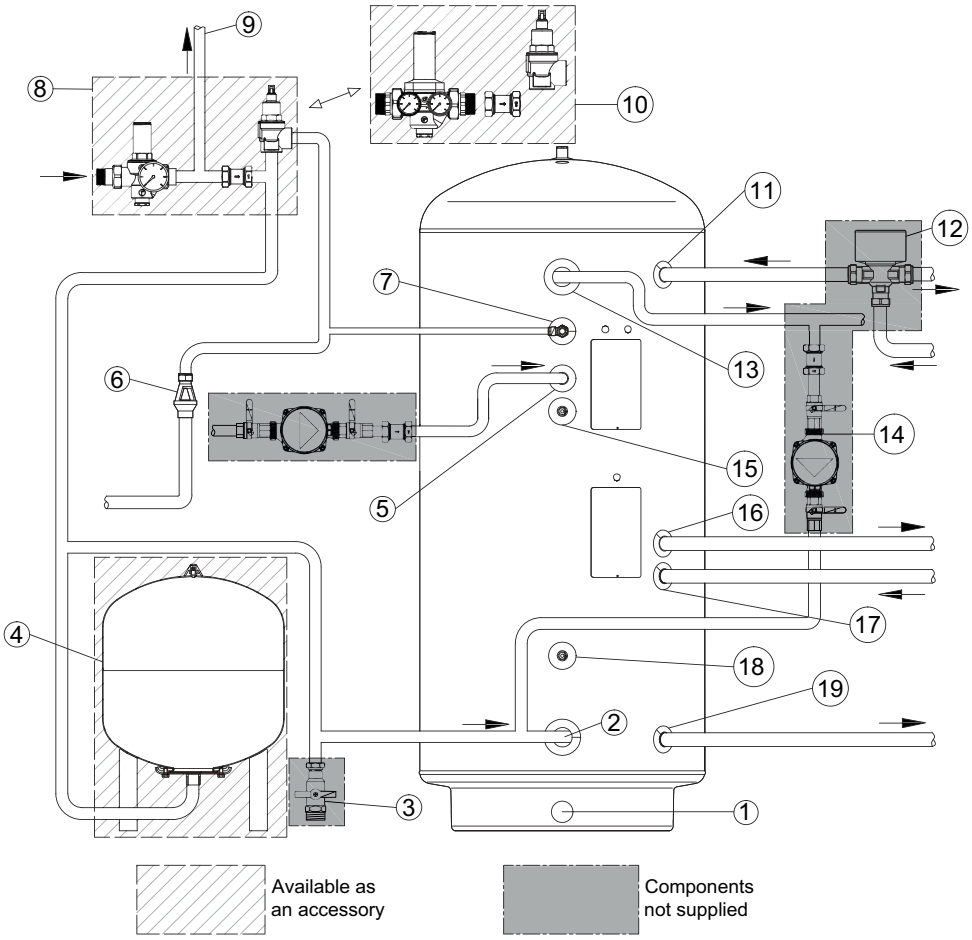

Item	Description
1	Cylinder drain
2	Cold water inlet
3	System drain valve (not supplied)
4	Expansion vessel (available as an accessory)
5	Secondary circulation (not supplied)
6	Tundish
7	Temperature-pressure relief valve
8	Unvented cylinder kit (available as an accessory)
9	Balanced cold water
10	2" unvented cylinder kit supplied with additional pressure gauge (available as an accessory)
11	Cylinder heating flow
12	Three-way motorised diverter valve (not supplied)
13	Hot water outlet
14	Legionella protection loop (not supplied)
15	Temperature sensor pocket
16	Cylinder heating return
17	Cylinder solar inlet
18	Solar temperature sensor pocket
19	Cylinder solar return

NOTE: Items included with large capacity auroSTOR cylinders are documentation and tundish. Unvented cylinder kits and expansion vessels are available in a range of sizes as an accessory, see page 26

uniSTOR and auroSTOR accessories

Description	Article number
Immersion heater 7kW (800 litre uniSTOR only)	0020235671
Unvented cylinder kit 1"	0020235964
Unvented cylinder kit 1¼"	0020235965
Unvented cylinder kit 1½"	0020235966
Unvented cylinder kit 2"	0020235967
Expansion vessel 50 litre (for uniSTOR and auroSTOR 500 litre)	0020229941
Expansion vessel 80 litre (for uniSTOR 800 litre)	0020229942

Expansion vessel dimensions

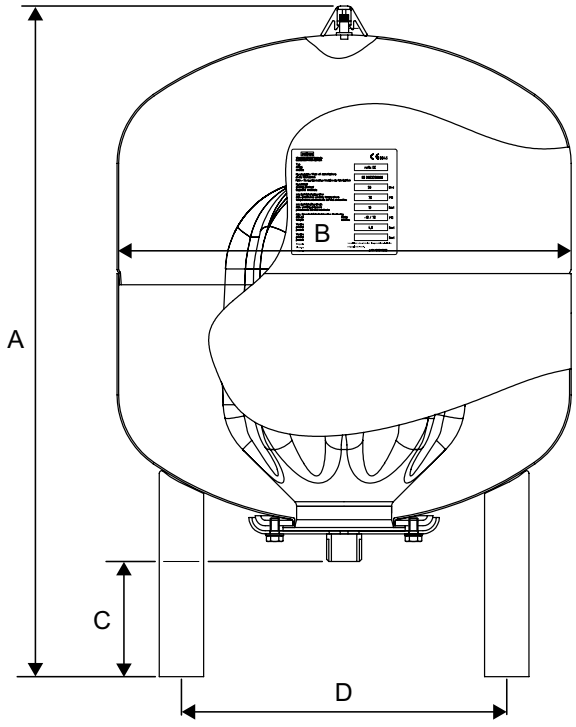

Dimensions	Unit	50 litre expansion vessel	80 litre expansion vessel
A = Height	mm	604	729
B = Diameter		409	480
C = Connection height		104	152
D = Feet span c/c		293	351

Pressure drop chart

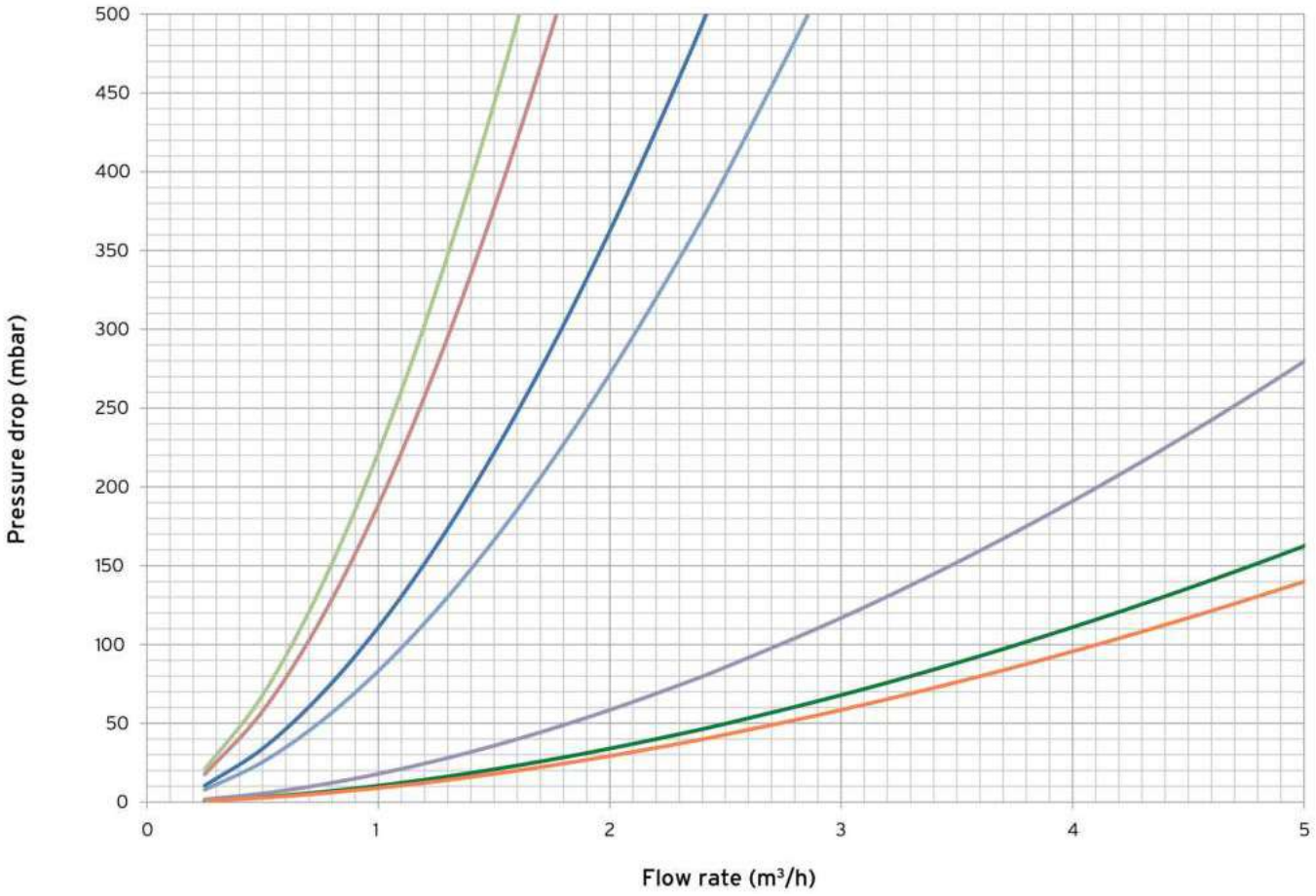

1.0 m² (Ø22 mm) = uniSTOR 150 litre and auroSTOR 500 litre (lower coil)

1.4 m² (Ø22 mm) = uniSTOR 200 litre

2.4 m² (Ø22 mm) = uniSTOR 250 litre

2.8 m² (Ø22 mm) = uniSTOR 300 litre

2.3 m² (Ø35 mm) = auroSTOR 500 litre (upper coil)

4.7 m² (Ø25.4 mm) = uniSTOR 500 litre

7.0 m² (Ø25.4 mm) = uniSTOR 800 litre

Industry leading training for industry leading engineers

Our training team provides industry brilliance with its tailored training courses, striving to keep you one step ahead of the ever-evolving heating and hot water technologies and industry regulations.

Due to the dynamic situation in recent years, we have evolved into a blended learning journey. Incorporating online courses with our hands on product training. For more information about the courses available, please visit our website.

Service and spares support

Spares and support, year after year
Vaillant is committed to responsible spares provision and provides spares for a minimum of 15 years after production ceases. We have a nationwide network of genuine spares stockists and a dedicated spare parts team to help you identify the parts you require.

Vaillant has even developed an app that helps identify spare parts to make ordering easier.

sparesCHECK app

- ✓ Trade only
- ✓ Online & offline
- ✓ Exploded device views
- ✓ Over 4,000 pictures
- ✓ Serial number scanning
- ✓ Part "where used"

ANDROID APP ON Google play

Available on the App Store

Simply search for Vaillant on Google Play or the App Store

Service you can count on
At Vaillant UK, we invest as much of our resources into our service and support as we do in creating our outstanding heating solutions. So you can rest assured that when you choose a Vaillant product, you will be supported by the best service in the industry.

Vaillant has specialist teams available to support installers and end-users with all enquiries. We pride ourselves on the efficiency of our service departments, supported by online tools that allow our customers to book appointments for our services for added convenience.

Vaillant has over 250 service engineers. This includes the largest specialist fleet of renewable and commercial systems engineers in the UK.

With phone operators available 364 days a year, service and support from Vaillant UK is never far away.

Supporting your business

Free extended guarantees

Product	Out the box Guarantee	Free Advance Guarantee
ecoTEC exclusive with Green iQ	5 years	10 years*
ecoTEC plus	5 years	10 years**
ecoFIT pure	2 years	10 years‡
ecoTEC pro	2 years	7 years
ecoTEC plus 48/64	5 years	N/A
aroTHERM	2 years	5 years

*When fitted with a boiler protection kit

**When fitted with a boiler protection kit, excludes 48 and 64kW light commercial boilers

‡When fitted with an Advance boiler protection kit

Training

Visit your local Vaillant Centre of Excellence for industry leading training on our products and receive 200 credits for attending. To find out more information and what courses are available, give our Training team a call on **0345 601 8885** or email on **training@vaillant.co.uk** or contact your local Area Sales Manager.

Homeowner leads

We'll send you leads from local homeowners from our 'Find an Installer' tool.

Rewarding your loyalty

Ways to earn cash and credits

- Register Vaillant products on Advance
- Use #Advance on your Twitter posts
- Complete our training
- Attend an event
- Special personalised offers

Our catalogues

Your cashback can be spent on discounted tools, vouchers or withdrawn as a business cheque.

Advance trips

Members of Advance will be invited to take part in offers and incentives ran throughout the year where you have the chance to boost your rewards and even get the chance to earn a space on one of our exclusive all expenses paid trips!

Help at your fingertips

Pick up our handy quick start guide to discover how quick and simple it is to register our products through the Advance app.

Download the Advance app and start boosting your business today. Sign up at **vaillant-advance.co.uk**

Available on the App Store

ANDROID APP ON Google play

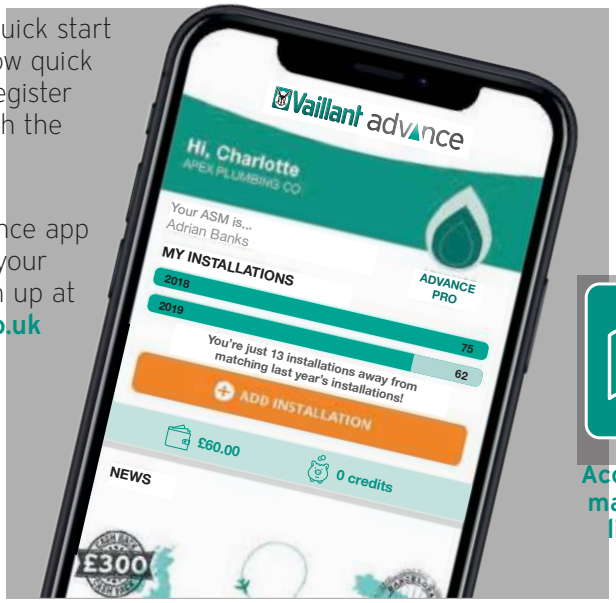

What can you do on the Advance app?

Register Vaillant products

Free Gas Safe registrations

Access all our manuals and literature

Special offers

Contacts

Sales enquires
Vaillant sells its products through plumbing and heating merchants in the UK. For further information, contact your local Vaillant sales representative.
Phone: **0345 602 2922**

Renewables
For renewable products aftersales service and commissioning.
Phone: **0345 602 0262**
Email: **aftersales@vaillant.co.uk**

Training
For information on training centres and courses in your area.
Phone: **0345 601 8885**
Email: **training@vaillant.co.uk**

Technical enquiries
If you have a technical query, you can contact us by phone or email.
Phone: **0344 693 3133**
Email: **technical@vaillant.co.uk**

Spares enquiries
If you need helping finding a spare part, you can download our app from the appStore or Google Play.
Phone: **01773 596 615**
Option 1: Vaillant stock availability
Option 2: If you require a part number

Commercial
For commercial products aftersales service and commissioning.
Phone: **0330 100 8574**

General enquiries
If you are unsure of who you need to speak to or you have a general enquiry, our friendly reception staff will happily point you in the right direction.
Phone: **0345 602 2922**

Vaillant

Heating Hot water Renewables

Vaillant Group UK Ltd.
Nottingham Road, Belper, Derbyshire DE56 1JT
Telephone 0345 602 2922
www.vaillant.co.uk/for-installers
info@vaillant.co.uk

vaillantuk
VaillantUK
vaillant.uk
Vaillant UK
VaillantUK

VALBROB2BHPCYL0521