TRITON

REGISTER ONLINE
ENTER A PRIZE DRAW

WIN £100

LOVE2SHOP VOUCHERS

VISIT OUR WEBSITE TODAY

TRITONSHOWERS.CO.UK/REGISTER

PRODUCT REGISTRATION IS ONLY AVAILABLE TO UNITS PURCHASED & INSTALLED IN THE UK

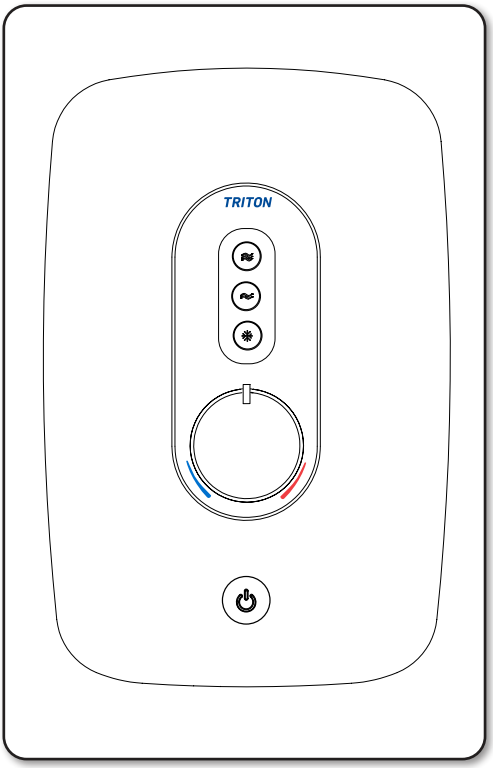

FOR YOUR SERVICE REFERENCE

NOTE DOWN THE PRODUCT CODE BELOW

(FROM THE FRONT OR TOP OF THE BOX)

_ _ _ _ _ _ _ _ _ _ _ _ _ _ _ _ _ _

ALTERNATIVELY REGISTER BY TEL: 024 7637 8321

IMPORTANT SAFETY ADVICE

The shower unit **MUST BE** switched off at the isolating switch when not in use. This is a safety procedure recommended for all electrical appliances.

The shower head and hose supplied with this product are safety critical parts of your shower. Failure to use genuine Triton parts may cause injury and invalidate your guarantee.

INSTALLATION AND OPERATING INSTRUCTIONS

Please read this book thoroughly and familiarise yourself with all instructions before commencing installation and keep it for future reference.

The shower installation **MUST** be carried out by a suitably qualified person, **in the sequence of this instruction book.**

UK registered design No's:
6133998
6133999
6134000

2181642E - August 2022

PLEASE READ THIS IMPORTANT SAFETY INFORMATION

Products manufactured by Triton are safe and without risk provided they are installed, used and maintained in good working order in accordance with our instructions and recommendations.

⚠ **WARNING: DO NOT** operate shower if frozen, or suspected of being frozen. It must thaw out before using.

⚠ **DO NOT** operate the unit if the shower head or spray hose becomes damaged.

⚠ **DO NOT** restrict flow out of shower by placing shower head in direct contact with your body.

⚠ **DO NOT** operate the shower if water ceases to flow during use or if water has entered inside the unit because of an incorrectly fitted cover.

⚠ **WARNING: If restarting the shower immediately after stopping, be aware that a slug of hot water will be expelled for the first few seconds.**

⚠ The shower head must be descaled regularly.

⚠ Fit only shower heads recommended by the manufacturer and never fit any additional device to restrict the water outlet flow.

⚠ The outlet must not be connected to any tap or fitting other than those specified.

⚠ This appliance is intended to be permanently connected to the water mains and not connected by a hose set.

⚠ A suitable double pole isolation switch for supply disconnections must be incorporated in the fixed wiring circuit in accordance with current wiring rules. See Electrical Installation section for further details.

⚠ The water inlet of this appliance shall not be connected to inlet water obtained from any other water heating system.

Mains water pressure only.
Minimum inlet pressure 100kPa (1 bar) 150kPa (1.5 bar) for 10.5kW
Maximum inlet pressure 1000kPa (10 bar)

This book contains all the necessary fitting and operating instructions for your electric shower.
Care taken during the installation will provide a long, trouble-free life from your shower.

⚠ WARNING ⚠

This appliance can be used by children aged from 3 years and above and persons with reduced physical, sensory or mental capabilities or lack of experience and knowledge if they have been given supervision or instruction concerning use of the appliance in a safe way and understand the hazards involved. Children may not play with the appliance. Cleaning and user maintenance shall not be made by children.

IMPORTANT - PLEASE READ THESE GENERAL GUIDANCE NOTES BEFORE PROCEEDING

1 GENERAL

1.1 Isolate the electrical and water supplies before removing the cover.

1.2 Read all of these instructions and retain them for later use.

1.3 **DO NOT** take risks with plumbing or electrical equipment.

1.4 Isolate electrical and water supplies before proceeding with the installation.

1.5 The unit must be mounted onto the finished wall surface (on top of the tiles). **DO NOT** tile up to or seal around **ANY PART** of the unit using silicone sealer after fixing to the wall. Special care must be taken **NOT TO BLOCK OR SEAL ANY PRD VENTS ON THE UNIT**.

1.6 Contact Customer Experience *(see back page)*, if any of the following occur:

a) *If it is intended to operate the shower at pressures above the maximum or below the minimum stated.*

b) *If the unit shows a distinct change in performance.*

c) *If the shower is frozen.*

1.7 If it is intended to operate the shower in areas of hard water (above 200 ppm temporary hardness), a scale inhibitor may have to be fitted. For advice on the Scale Inhibitor, contact Customer Experience.

1.8 The shower head must be cleaned regularly with descalent to remove scale and debris, otherwise restrictions to the flow on the outlet of the unit will result in higher temperatures and could also cause the (PRD) Pressure Relief Device in the unit to operate.

1.9 This product is not suitable for mounting into steam rooms or steam cubicles.

2 PLUMBING

2.1 The plumbing installation must comply with Water Regulations, Building Regulations or any particular regulations as specified by Local Water Company or Water Undertakers and should be in accordance with BS EN 806.

2.2 The supply pipe must be flushed to clear debris before connecting to the shower unit.

2.3 **DO NOT** solder pipes or fittings within 300mm of the shower unit, as heat can transfer along the pipework and damage components.

2.4 **DO NOT** fit any form of outlet flow control as the outlet acts as a vent for the heater can.

2.5 **DO NOT** use excessive force when making connections to the flexible hose or shower head, finger tight is sufficient.

2.6 All plumbing connections must be completed before making the electrical connections.

2.7 This appliance **MUST NOT** be connected to the inlet supply by a hose-set.

3 ELECTRICAL

3.1 The installation must comply with BS 7671 'Requirements for electrical installations' (IEE wiring regulations), building regulations or any particular regulations as specified by the local Electrical Supply Company.

3.2 This appliance **MUST** be earthed.

3.3 In accordance with 'The Plugs and Sockets etc. (Safety) Regulations 1994', this appliance is intended to be permanently connected to the fixed wiring of the electrical mains system.

3.4 Make sure all electrical connections are tight to prevent overheating.

3.5 A 30mA residual current device (RCD) **MUST** be installed in all UK electric and pumped shower circuits. This may be part of the consumer unit or a separate unit.

3.6 Switch off immediately at isolating switch if water ceases to flow during use.

3.7 Other electrical equipment i.e. extractor fans, pumps must not be connected to the circuits within the unit.

3.8 Switch off at isolating switch when not in use. This is a safety procedure recommended with all electrical appliances.

3.9 As with all electrical appliances it is recommended to have the shower and installation checked at least every two years by a competent electrician to ensure there is no deterioration due to age and usage.

ADVICE TO USERS

The following points will help you understand how the shower operates:

a. The electric heating elements operate at a constant rate at your chosen power setting. It is the rate of the water passing through the heater can which determines the water temperature. The slower the flow, the hotter the water becomes; the faster the flow, the cooler the water.

b. During winter, the mains water supply will be cooler than in the summer. The flow rate will vary between seasons at any one temperature setting. At different times of the year you may have to adjust the position of the temperature control to maintain your desired temperature setting.

c. The stabiliser valve minimises variations in shower temperature during mains water pressure changes. If changes in shower temperature are experienced during normal use, it will most likely be caused by the water pressure falling near to or below the minimum level. The drop in pressure may be due to water being drawn off at other points in the house whilst the shower is in use. If pressure drops appreciably below the minimum, the heating elements will automatically cut out.

NOTE: If ever the water becomes too hot and you cannot obtain cooler water, first check that the sprayplate in the shower head has not become blocked.

DO NOT place items such as soap or shampoo bottles on top of the unit. Liquid could seep through the joint between the cover and backplate.

⚠ COMISSIONING ADVICE

When first installed the unit will be empty. It is essential the unit should contain water before the elements are switched on. It is vital that the commissioning procedure is followed. Failure to carry out this operation will result in damage to the unit and will invalidate the guarantee.

ADVISORY - CLEANING

It is recommended that all products are cleaned using warm, soapy water.

DO NOT use abrasive or aggressive chemical cleaning products as this may affect the product surface finish and invalidate your guarantee.

To check the product suitability for commercial and multiple installations, please contact Triton's specification advisory service before installation.

Telephone: 024 7637 2222

E mail: technical@tritonshowers.co.uk

CONTENTS Page

INTRODUCTION
IMPORTANT SAFETY INFORMATION & GENERAL GUIDANCE NOTES (please read)
ADVICE TO USERS

SPECIFICATIONS 6

DIMENSIONS & CABLE/WATER ENTRY POINTS 7

ELECTRICAL REQUIREMENTS ..... 8 - 9

INSTALLING THE SHOWER ..... 10 - 16
- Siting of the shower ..... 10 - 11
- Plumbing installation 12
- Fit to the wall & connect shower supplies ..... 12 - 13
- Electrical installation 14
- Fitting the Cover 15
- COMMISSIONING PROCEDURE 16
- Connecting the PCB cable 17

OPERATING THE SHOWER ..... 18 - 19

INSTRUCTIONS FOR INSTALLERS & SERVICE ENGINEERS ONLY - cleaning the filter 20

FAULT FINDING/TROUBLESHOOTING ..... 21 - 22

PRODUCT CODES 23

SPARE PARTS 23

UK SERVICE POLICY/UK GUARANTEE ..... REAR COVER

PRODUCT FICHE			
Model	8.5kW	9.5kW	10.5kW
Load Profile	XS	XS	XS
Energy Efficiency Class	A	A	A
Energy Efficiency (%)	39	39	39
Annual Electricity Consumption (kwh)	474	473	474
Sound Power Level (db)	15	15	15

ELECTRICAL	
Nominal power - rating at 240V	Nominal power - rating at 230V
8.5kW – (40A MCB rating)	7.8kW – (40A MCB rating)
9.5kW – (40A MCB rating)	8.7kW – (40A MCB rating)
10.5kW – (45A MCB rating)	9.6kW – (45A MCB rating)
PLUMBING (see page 10 & 11 for water regulations)	
Supply Source	Mains pressure cold water only
Minimum running pressure and flow to the inlet of the shower for full performance	100kPa (1.0 bar) at 8 litres per minute for **8.5kW** & **9.5kW**
	150kPa (1.5 bar) at 11 litres per minute for **10.5kW**
Maximum static pressure	1000 kPa (10 bar)
Maximum inlet temperature	28°C
Minimum inlet temperature	2°C
Inlet connection	15mm diameter
Outlet connection	½" BSP male thread
MATERIALS	
ABS	Backplate, cover, controls, shower head
Acetal	Sprayplate
Minerally insulated corrosion resistant metal sheathing	Elements
STANDARDS and APPROVALS	
Splashproof rating	IPX4
Safety	Complies with the requirements of current British and European safety standards for household and similar electrical appliances
BEAB	Complies with requirements of the British Electrotechnical Approvals Board (BEAB)
CE / UKCA	Meets with Compliance with European/UK Community Directives

DIMENSIONS

Fig.1

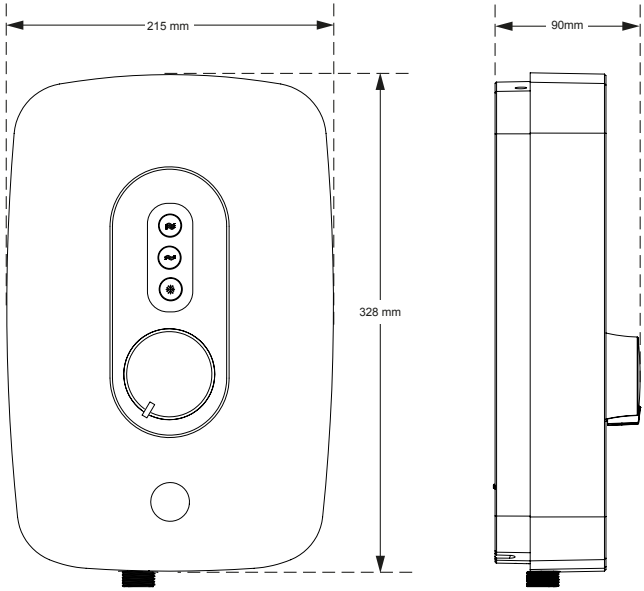

ENTRY POINTS

Fig.2

WATER

CABLE

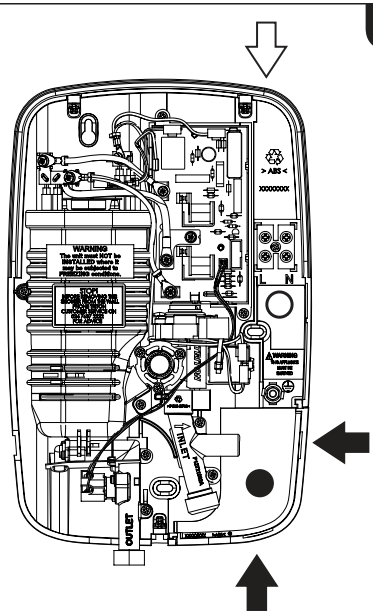

PLEASE NOTE: Deviation from the approved entry points will invalidate product specifications and warranty.

ELECTRICAL REQUIREMENTS

⚠ WARNING! ⚠
THIS APPLIANCE MUST BE EARTHED

The installation, supply cable and circuit protection must conform with BS 7671 (IEE wiring regulations) and be sufficient for the amperage required.

The following notes are for guidance only:

1 The shower must only be connected to a 230-240V ac supply. If you are installing a shower with a kilowatt rating above 9kW, it is advisable to contact the local electricity supply company.

1.1 The electrical rating of the shower is shown on the rating label **(Fig.3)** within the unit.

2 Before making any sort of electrical connection within the installation, make sure that no terminal is live. If in any doubt, switch off the whole installation at the mains supply and remove the correct fuse.

3 The shower must be connected to its own independent electrical circuit. **IT MUST NOT** be connected to a ring main, spur, socket outlet, lighting circuit or cooker circuit.

3.1 The electrical supply must be adequate for the loading of the unit and existing circuits.

4 Check your consumer unit (main fuse box) has a main switch rating of 80A or above and that it has a spare fuse way which will take the fuse or Miniature Circuit Breaker (MCB) necessary for the shower **(Fig.4)**.

4.1 If your consumer unit has a rating below 80A or if there is no spare fuse way, then the installation will not be straightforward and may require a new consumer unit serving the house or just the shower.

4.2 You will need to contact the local electricity company. They will check the supply and carry out what is necessary.

5 For close circuit protection **DO NOT** use a rewireable fuse. Instead use a suitably rated Miniature Circuit Breaker (MCB) or cartridge fuse **(see Table A)**.

5.1 A 30mA residual current device (RCD) **MUST** be installed in all UK electric and pumped shower circuits. This may be part of the consumer unit or a separate unit.

Fig.3 - Illustrative purposes only

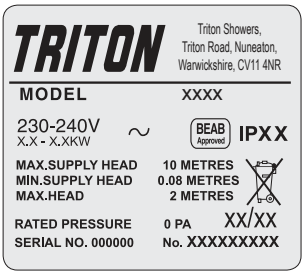

Fig.4 Schematic of installation circuit

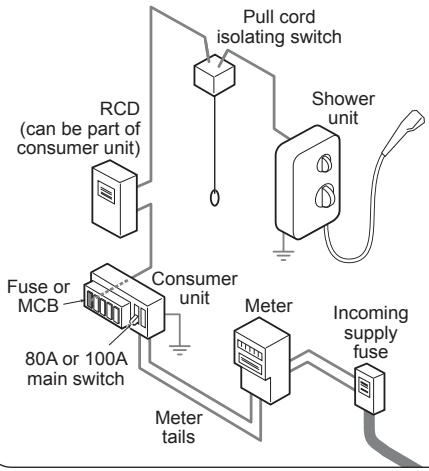

Table A

CIRCUIT PROTECTION		
unit rating	**MCB**	**cartridge fuse**
7.0kW	30/32A	30A
7.5kW	32A	35A
8.0kW	40A	35A
8.5kW	40A	45A
9.0kW	40A	45A
9.5kW	40/45A	45A
10.5kW	45A	45A

6 A 45 amp double pole isolating switch with a minimum contact gap of 3mm in both poles must be incorporated in the circuit.

6.1 It must have a mechanical indicator showing when the switch is in the OFF position, and the wiring must be connected to the switch without the use of a plug or socket outlet.

6.2 The switch must be accessible and clearly identifiable, but out of reach of a person using a fixed bath or shower, except for the cord of a cord operated switch, and should be placed so that it is not possible to touch the switch body while standing in a bath or shower cubicle. It should be readily accessible to switch off after using the shower.

7 Where shower cubicles are located in any rooms other than bathrooms, all socket outlets in those rooms must be protected by a 30mA RCD.

8 The current carrying capacity of the cable must be at least that of the shower circuit protection **(see Table B)**.

8.1 To obtain full advantage of the power provided by the shower, use the shortest cable route possible from the consumer unit to the shower.

8.2 It is also necessary to satisfy the disconnection time and thermal constraints which means that for any given combination of current demand, voltage drop and cable size, there is a maximum permissible circuit length.

9 The shower circuit should be separated from other circuits by at least twice the diameter of the cable or conduit.

9.1 The current rating will be reduced if the cabling is bunched with others, surrounded by thermal loft or wall insulation or placed in areas where the ambient temperature is above 30°C. Under these conditions, derating factors apply and it is necessary to select a larger cable size.

9.2 In the majority of installations **(see Table B)**, the cable will unavoidably be placed in one or more of the above conditions. This being so, it is strongly recommended to use a minimum of 10mm cabling throughout the shower installation.

9.3 In any event, it is essential that individual site conditions are assessed by a competent electrician in order to determine the correct cable size and permissible circuit length.

Table B

Twin and earth PVC insulated cable Current carrying capacity

Installed in an insulated wall	In conduit trunking	Clipped direct or buried in a non-insulated wall
6mm² 32A	6mm² 38A	6mm² 46A
10mm² 43A	10mm² 52A	10mm² 63A
16mm² 57A	16mm² 69A	16mm² 85A

Note: Cable selection is dependent on derating factors

***The method below may be used by installers to determine the approximate size of the incoming cable.**

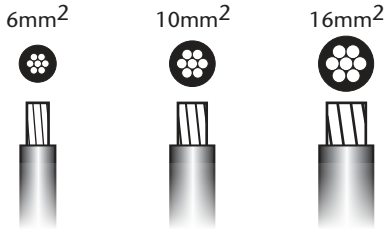

1. Measure the width of an individual strand, and half that measurment to find *(r)*, e.g: *1.34mm ÷ 2 = (r) 0.67mm*
2. Multiply *(r) x (r)* x *3.14*, e.g: *(r) 0.67 x (r) 0.67* x *3.14 = 1.41mm²*
3. Multiply this by the number of wire strands (usually 7), e.g: *1.41mm² x 7 = 9.87mm²*.
4. The number obtained would suggest *10mm²* wiring.

***PLEASE NOTE:** *If unsure, consult a qualified Electrician.*

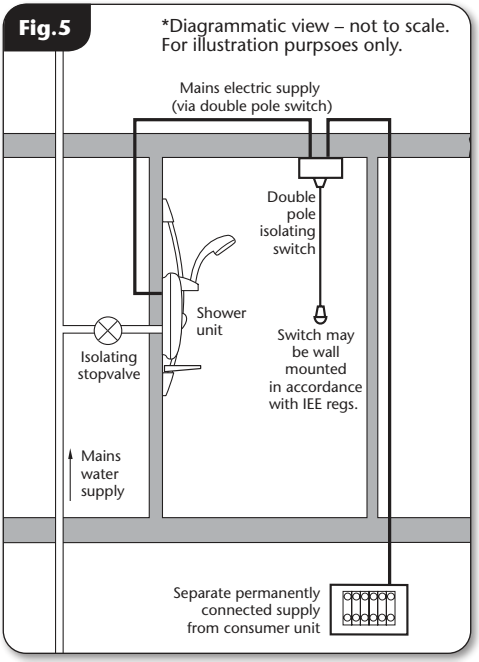

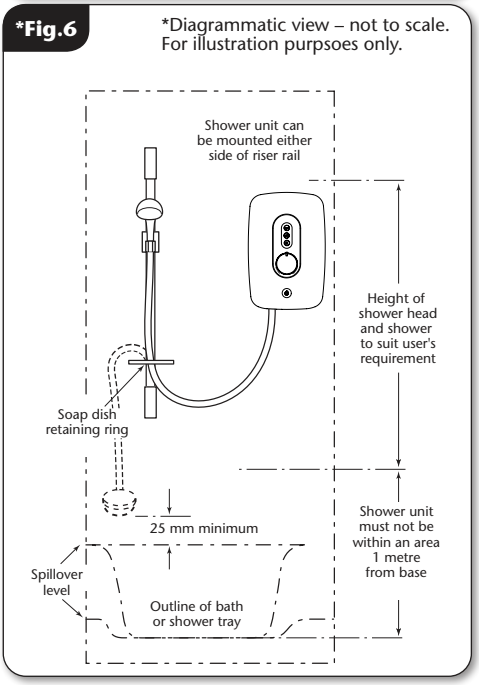

SITING OF THE SHOWER

WARNING!
The shower must not be positioned where it will be subjected to freezing conditions.

The installation must be in accordance with Water Regulations/Bylaws - **see page 7 for water specifications.**

If it is intended to operate the shower at pressures above the maximum or below the minimum stated, contact Customer Experience for advice.

If the stated flow rates are not available, it may not be possible to achieve optimum performance from the unit throughout the year.

During periods of high ambient temperatures it may be necessary to select the economy power setting to achieve your preferred shower temperature.

Fig.5 shows a typical system layout.

Refer to **fig.6** for the correct siting of the shower. Position the shower unit vertically and where it will **NOT** be in direct contact with water from the shower head.

Allow enough room between the ceiling and the shower to access the top cover screws.

Mark out entry points and routing of the water and electric supplies into the shower.

IMPORTANT: If installing onto a tiled wall, ALWAYS mount the unit on the surface of the tiles. NEVER tile up to the unit. The unit must be mounted on a flat surface which covers the full width and length of the backplate. It is important that the wall surface is flat otherwise difficulty may be encountered when fitting the cover and subsequent operation of the unit may be impaired.

IMPORTANT: Water Regulations
It is required that the shower head be '*constrained by a fixed or sliding attachment so that it can only discharge water at a point not less than 25mm above the spill-over level of the relevant bath, shower tray or other fixed appliance*'.

If the riser kit is supplied with a 'soapdish hose retainer' or bespoke 'hose retainer', it will in most cases meet this requirement. If the shower head can still be placed within a bath, basin or shower tray within the 25mm limit, then a double check valve or similar, **MUST be fitted in the supply pipework to prevent back-flow**.

Pressure Relief Safety Device

A pressure relief device (PRD) is designed into the shower unit which complies with European standards. The PRD provides a level of appliance protection should an excessive build up of pressure occur within the shower.

DO NOT operate the shower with a damaged or kinked shower hose, or a blocked shower head. This may cause the PRD to operate.

When commissioning, the shower head must be removed from the hose. Failure to follow this procedure may cause the PRD to operate.

Ensure the shower is positioned over a bath or shower tray. If the PRD operates, then water will eject from the bottom of the unit. Should this happen, turn off the electricity and water supplies to the shower at the isolating switch and stopvalve. Contact Customer Experience for advice on replacing the PRD.

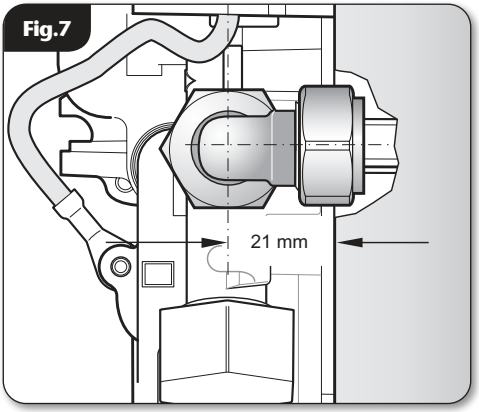

IMPORTANT INFORMATION

The outlet of the shower acts as a vent and must not be connected to anything other than the hose and shower head supplied.

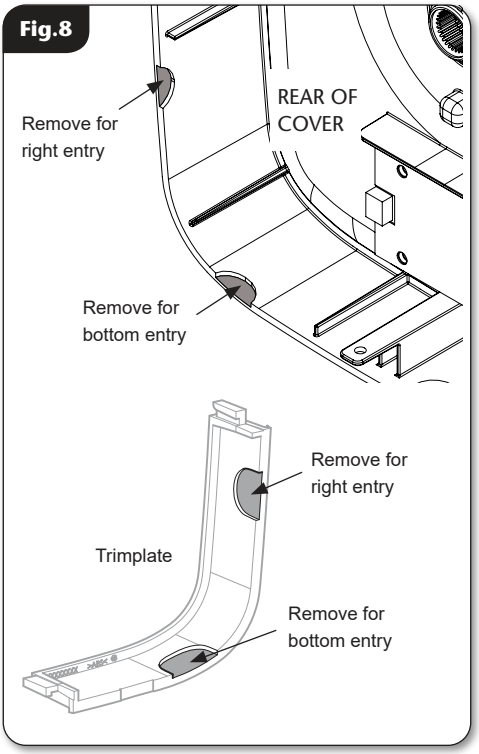

PLUMBING INSTALLATION

Plumbing must be carried out before wiring.

DO NOT use jointing compounds on any pipe fittings for the installation.

DO NOT solder fittings near the shower unit as heat can transfer along the pipework and damage components.

Compression fittings **MUST** be used to connect to the inlet of the shower **(fig.7)**. Push-on fittings must **NOT** be used as full engagement cannot be guaranteed.

If installing a feed pipe from the back or bottom, the centre of the inlet valve to the wall surface is 21mm **(fig.7)**.

NOTE: If entry is from the back, the nut of the compression fitting will be partially behind the surface of the wall. This area MUST be left clear when plastering and tiling around the pipework in order to make the nut accessible for future adjustments.

NOTE: An additional stopvalve (complying with Water Regulations) must be fitted in the mains water supply to the shower as an independent means of isolating the water supply should maintenance or servicing be necessary. If this isolator is fitted in a loft space, the loft must have a fixed access ladder and be boarded, with appropriate lighting from the access point to the isolator.

IMPORTANT: Before completing the connection of the water supply to the inlet of the shower, flush out the pipework to remove all swarf and system debris. This can be achieved by connecting a hose to the pipework and turning on the mains water supply long enough to clear the debris to waste.

FITTING TO THE WALL

Pipe/Electrical Access Points

If bottom or right surface entry is required for the mains cold water, then the necessary opening will need to be cut out in the cover and the trimplate **(fig.8)**.

If surface cable entry from the top is required then a small area will need to be cut out in the backplate **(fig.9)**.

Temporarily connect the mains water supply to the inlet of the shower using a 15mm x 15mm compression fitting.

Use the backplate as a template, ensuring it is level, to mark the fixing holes **(fig.10)**.

Remove the unit from the wall. Drill and plug the wall. An appropriate drill bit should be used. If the wall is plasterboard or a soft building block, appropriate wall plugs should be fitted.

⚠ WARNING

Check there are no hidden cables or pipes before drilling holes for wall plugs. Use great care when using power tools near water. The use of a residual current device (RCD) is recommended when using power tools.

Fit the top screw and hook the backplate over it, then fit the middle and bottom fixing screws into position. **DO NOT** fully tighten the screws at this stage, as the fixing holes are elongated to allow for out of square adjustment after the plumbing connections have been completed.

Connect the mains water supply to the inlet. **DO NOT** use excessive force when making the connection.

Make sure the backplate is square on the wall and tighten the screws which hold it to the wall.

Turn on the mains water supply and check plumbing connections are watertight and there are no leaks in the pipework connection to the shower.

NOTE: At this stage no water can flow through the unit.

IMPORTANT: A suitable sealant should always be used to seal around the incoming pipework to prevent water entering the wall.

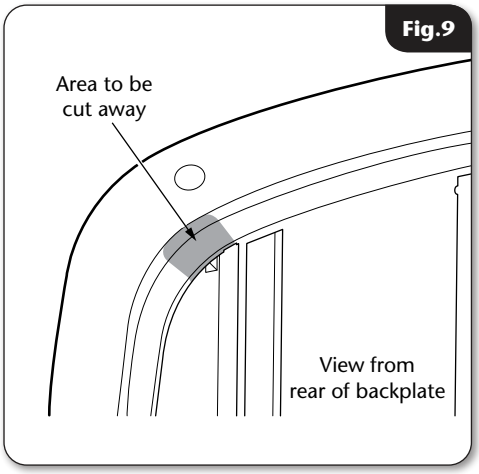

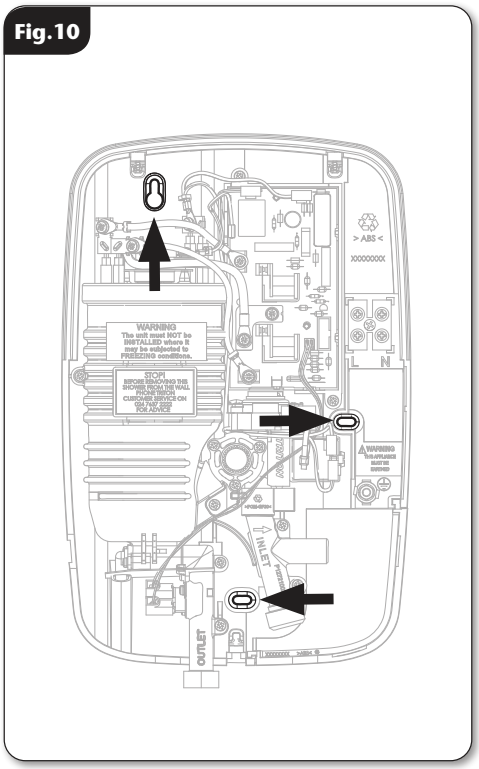

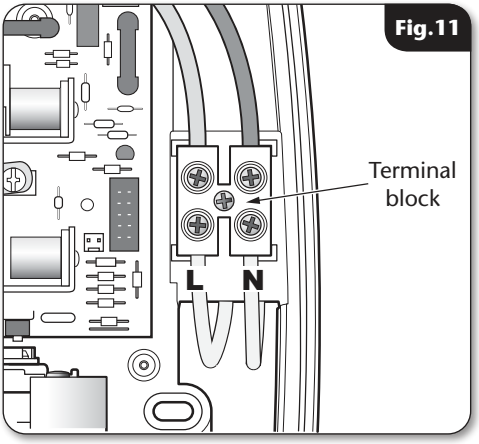

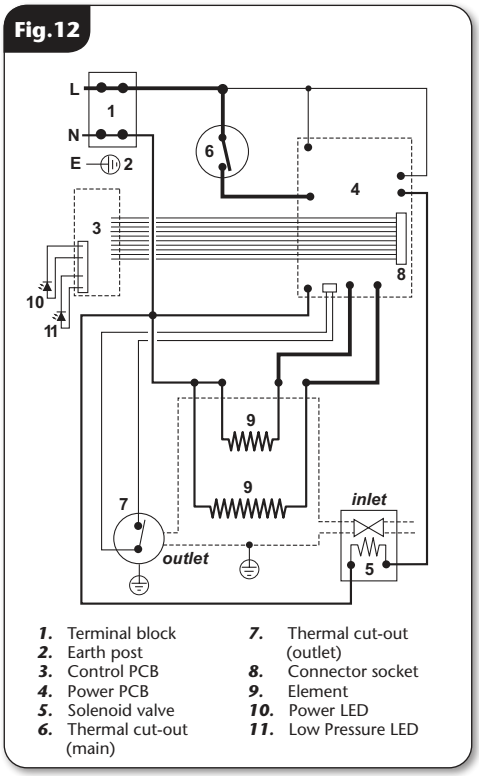

1. Terminal block
2. Earth post
3. Control PCB
4. Power PCB
5. Solenoid valve
6. Thermal cut-out (main)
7. Thermal cut-out (outlet)
8. Connector socket
9. Element
10. Power LED
11. Low Pressure LED

NOTE: The elements on UK models are to 240V specification and will give a lower kW rating if the voltage supply is below 240V.

ELECTRICAL INSTALLATION

IMPORTANT: Switch off the electricity supply at the mains before proceeding.

The supply cable **MUST** be secured either by routing through conduit, in trunking, or by embedding in the wall, in accordance with IEE regulations.

NOTE: Conduit entry can only be from the rear. Deviations from the designated entry points will invalidate product approvals - see Entry Points fig 2.

Seal around rear entry cable to prevent water ingress into the wall.

Route the cable into the shower unit for connection to the terminal block **(fig.11)** as follows:

Earth cable to terminal marked ⏚
Neutral cable to terminal marked **N**
Live cable to terminal marked **L**

This appliance **MUST BE** earthed**.**

Once the cables have been installed, the two trimplates will need to be fitted.

Fig.12 shows a schematic wiring diagram.

IMPORTANT: When connecting the cable fully tighten the terminal block screws and make sure that no cable insulation is trapped under the screws. Loose connections can result in cable overheating.

NOTE: The supply cable earth conductor must be sleeved. The outer sheath of the supply cable must be stripped back to the minimum.

The use of connections within the unit or other points in the shower circuit to supply power to other equipment i.e. extractor fans, pumps, etc. will invalidate the guarantee.

DO NOT switch on the electricity supply until the shower cover has been fitted.

FITTING THE COVER

Fit the trimplate.

Turn the valve spindle fully clockwise until it stops **(fig.13).**

Turn the temperature flow control on the cover fully clockwise to the minimum flow position **(fig.14)**.

Fitting of the cover assembly will be simplified if the cover retaining screws are fitted into the backplate before starting the installation **(fig.15)**.

⚠ WARNING ⚠
COVER RETAINING SCREWS

ONLY the **SUPPLIED SCREWS** should be used. The use of non supplied screws **WILL** invalidate product specifications & warranty.

Offer the cover to the unit.

⚠ IMPORTANT ⚠

DO NOT connect the 10-way ribbon cable before the commissioning procedure has been completed.

Carefully locate the cover tags into the guide pockets on the backplate, ensuring the wires and ribbon cable are not trapped.

Guide the cover into position so that the control spindle locates correctly - minor adjustment may be necessary to align the control and spindle.

While applying slight pressure to the cover, secure in position with the retaining screws.

Fit the hose to the shower outlet making sure the outlet of the hose is directed to waste. Check the supplied sealing washer is in place.

DO NOT attach the shower head at this stage.

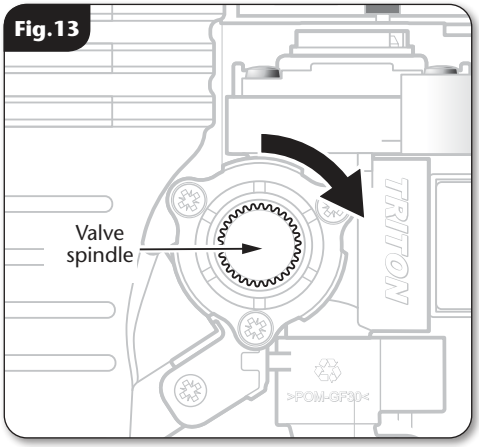

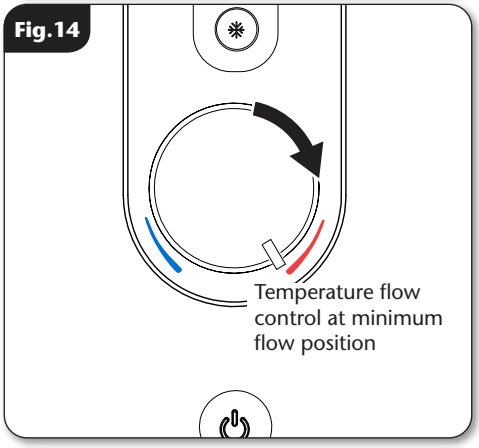

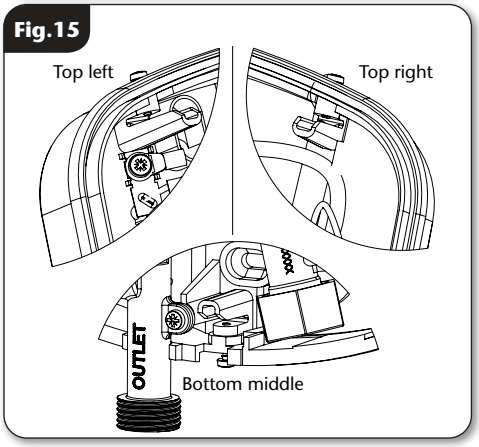

COMMISSIONING PROCEDURE

⚠ WARNING

Before normal operation of the shower, it is essential the following commissioning procedure is completed correctly.

The first operation of the shower is intended to flush out any remaining unit debris and to make sure the heater unit contains water before the elements are switched on.

This operation **MUST** be carried out **WITH** the hose screwed to the outlet but **WITHOUT THE SHOWER HEAD ATTACHED**. Ensure the sealing washer is in place and the outlet of the hose is directed to waste.

IMPORTANT: The valve spindle **(fig.13)** and the temperature flow control **(fig.14) MUST** be turned fully **clockwise to the minimum flow position - failure to do this could cause the PRD to operate.**

Ensure the water supply to the shower is turned on at the isolating stopvalve.

Switch on the electricity supply to the shower at the isolating switch.

Once water starts to flow from the hose, slowly rotate the temperature control fully anti-clockwise to the maximum flow position **(fig.16)**.

It will take about thirty seconds for a smooth flow of water to be obtained while air and any debris is being flushed from the shower

When a smooth flow of water is obtained, turn the temperature flow control from maximum to minimum flow and back again several times to release any trapped air within the unit.

Once the flushing out has been completed, switch off the electricity to the shower at the isolating switch. The water will cease to flow.

Unscrew the top and bottom cover retaining screws and lift the cover from the backplate.

NOTE: The screws do not need to be completely removed to be able to remove the cover.

Fig.16

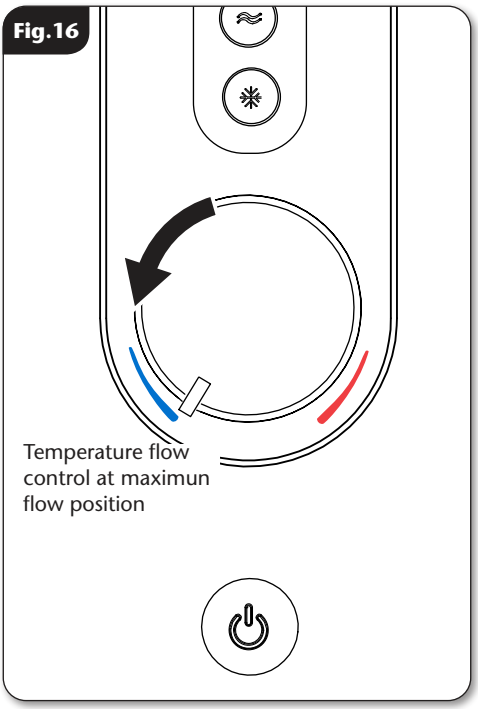

CONNECTING THE PCB CABLE & REFITTING THE COVER

IMPORTANT: Ensure the valve spindle and temperature flow control are in the correct positions - see figs.13 & 14.

Attached to the display PCB, inside the cover, is a 10-way ribbon cable. The ribbon cable connector must be plugged into the socket located at the right of the power PCB situated inside the unit **(fig.17)**.

The cable connector can only be fitted into the socket in one way. The ribbon cable has a coloured edge which is lowermost when correctly fitted to the socket.

Guide the cover into position so that the knob spindle locates correctly. Ensure the wires and ribbon cable are not trapped.

While applying slight pressure to the cover, secure in position with the retaining screws.

Turn the electricity supply back on at the isolating switch. The p**ower** indicator **(fig.18)** will light up.

It is recommended that the water and electric supplies to the shower are turned off while the riser rail kit is being installed.

The hose can be left attached to the shower outlet. Make sure the supplied sealing washer is fitted.

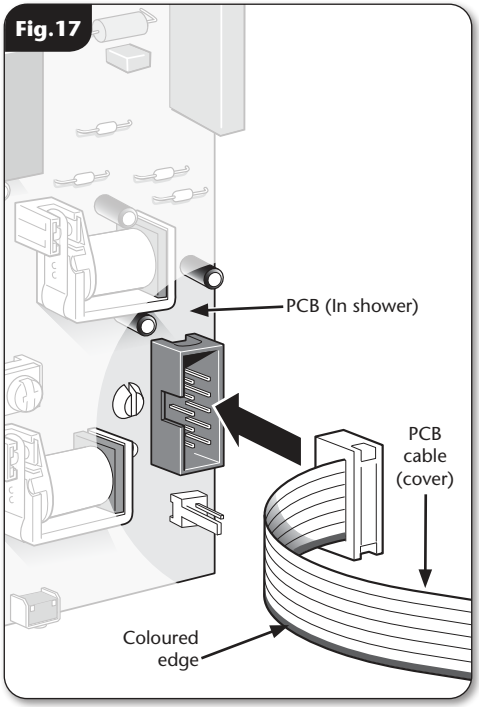

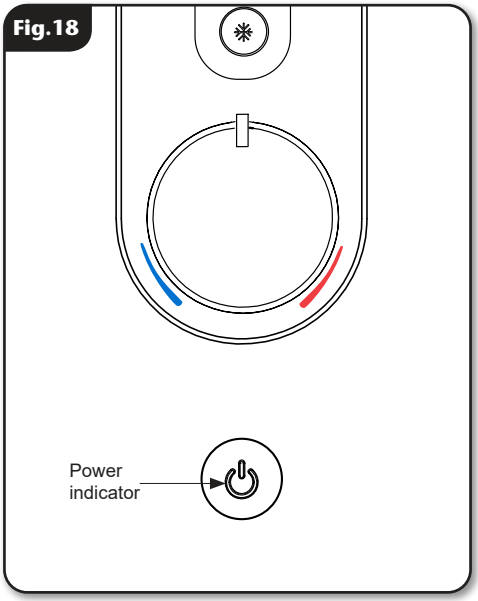

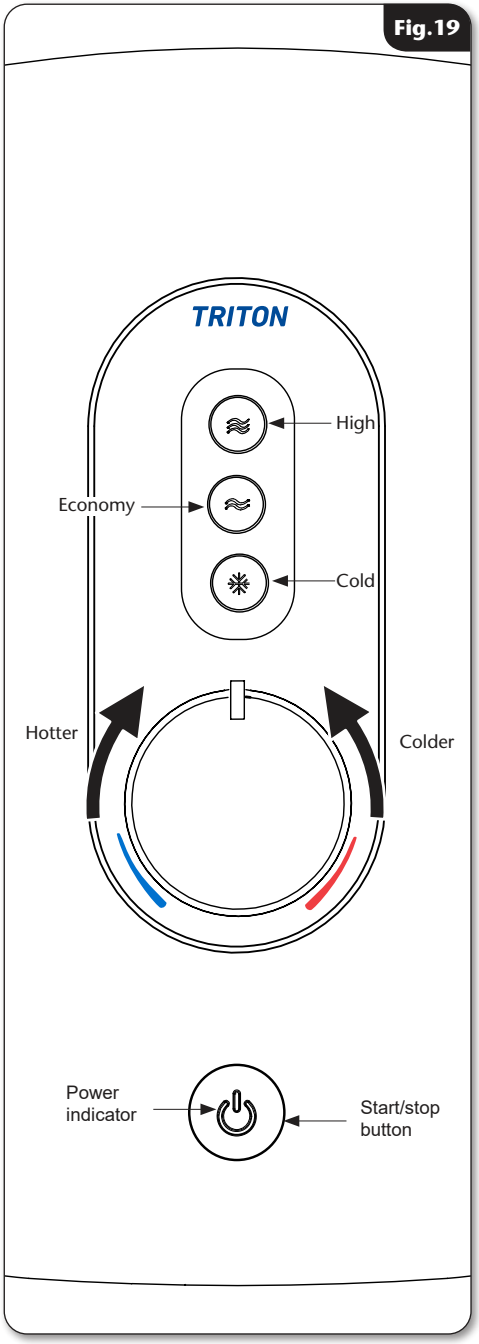

OPERATING THE SHOWER (fig.19)

When the electricity supply to the shower is switched on at the isolating switch, the power indicator will light up.

The **START/STOP, HIGH, ECONOMY OR COLD** control buttons may be pressed to start the shower.

NOTE: The shower starts as a default on the HIGH setting if the START/STOP button is used.

To stop the shower press the **START/STOP** button and the phased shutdown will begin. Water will cease to flow after approximately 5 seconds.

The **HIGH** setting allows the highest flow achievable for your preferred temperature. This setting should normally be regarded as optimum shower performance throughout the year.

The **ECONOMY** setting uses less energy when the ambient mains water temperature is high during hot months.

NOTE: The preferred control position on ECONOMY will give a different temperature to the same position on HIGH.

The **COLD** setting is for cold water only. Adjusting the temperature flow control at this setting will only increase or decrease the flow of the water from the shower head, it will not alter the water temperature.

IMPORTANT: It will take a few seconds for the temperature to stabilise once changes have been made.

NOTE: If the stated flow rate required for the unit cannot be met due to low water pressure, it will be necessary to operate the unit on the Economy setting during the warmer months because of flow rate limitations entering the unit.

Temperature Adjustment

The water temperature is altered by increasing or decreasing the flow rate of the water through the shower via the temperature flow control. Turning the control **anti-clockwise** will increase the flow of water through the shower and make the water **cooler**. Turning it **clockwise** will decrease the flow and make the water **hotter.**

After obtaining your preferred temperature, the control can be left as the normal setting and should only need altering to compensate for changes in ambient water temperature.

NOTE: It is advisable to test the showering temperature by hand before stepping under the shower head. There will always be a time delay of a few seconds between selecting a flow rate and the water reaching the stable temperature for that flow rate.

Low Pressure

If the water pressure falls below the minimum required for correct operation of the shower, resulting in the low pressure cut-out operating, the following will happen.

- The power to the heating elements will be switched off, preventing any undue temperature rises.
- The shower will operate on the **COLD** setting and the **START/STOP** button will flash.
- When there is adequate water pressure, the unit will automatically restore the power to the elements and return to the original setting selected.

Phased Shutdown

In use, every time the **STOP** button is pressed, power is switched off to the elements. Water will continue to flow for approximately 5 seconds, flushing out any remaining hot water. This makes sure the next immediate user will not receive a slug of hot water if standing under the shower head when starting the shower.

Safety Cut-out

The unit is fitted with an over-temperature safety device. In the event of abnormal operation which could cause unsafe temperatures within the unit, the device will disconnect the heating elements.

NOTE: It will require a visit from a qualified engineer to identify the nature of the fault and replace the safety device.

It is normal practice to leave the water supply permanently connected to the shower unit when not in use, but as with most electrical appliances, the shower must be switched off a the isolating switch when not in use.

INSTRUCTIONS FOR INSTALLERS AND SERVICE ENGINEERS ONLY

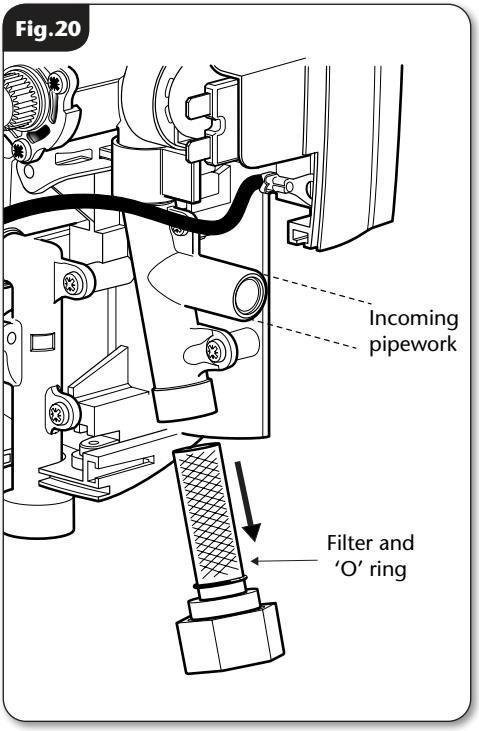

CLEANING THE FILTER

It is recommended that the filter is periodically cleaned in order to maintain the performance of the shower. It is essential that this operation is carried out by a competent person.

SWITCH OFF the electricity and water supply at the mains.

The inlet filter is situated in the bottom of the inlet pipe **(fig.20)**.

To gain access to the filter, remove the trimplate and then unscrew the retaining nut from the bottom of the inlet pipe.

When cleaning the filter, **DO NOT** use a sharp object as it will cause damage. It is preferable to use an old toothbrush or similar.

To reassemble, follow the procedure in reverse.

DO NOT over tighten the fittings on reassembly.

Important: Switch off the electricity at the mains supply and remove the circuit fuse before attempting any fault finding inside the unit.

Problem	Cause	Action
1 Shower inoperable, no water flow.	**1.1** Interrupted power supply.	**1.1.1** Blown fuse or circuit breaker. Check supply Renew or reset fuse or circuit breaker. If it fails again, consult a qualified electrician.
	1.2 Unit malfunction.	**1.2.1** Power cut? Check other appliances and if necessary, contact local Electricity Supply Co.
		1.2.2 Have unit checked. Contact Customer Experience.
	1.3 Thermal cut-out operated.	**1.3.1** The thermal cut-out safety device has operated. Have the unit checked by a suitably qualified service engineer or contact Customer Experience.
2 Water too hot.	**2.1** Not enough water flowing through the shower.	**2.1.1** Increase flow rate via temperature control.
		2.1.2 Blocked shower head — clean or replace blocked sprayplate in shower head.
	2.2 Blockage in supply.	**2.2.1** Check if stopvalves are fully open. Check if a blockage in the inlet filter.
	2.3 Increase in ambient water temperature.	**2.3.1** Adjust flow rate to give increased flow.
		2.3.2 Select economy power.
3 Water too cool or cold.	**3.1** Too much flow.	**3.1.1** Reduce flow rate via temperature control.
	3.2 Water pressure below minimum required (see rating label).	**3.2.1** Is water supply mains or tank fed?
		3.2.2 If tank fed, replumb to mains water supply or **see 3.2.4**.
		3.2.3 If mains fed, make sure that mains stopvalve is fully open and that there are no other restrictions in the supply while shower is in use, or **see 3.2.4**.
		3.2.4 Fit pump to give minimum pressure (see rating label). Contact Customer Experience for advice.

Important: Switch off the electricity at the mains supply and remove the circuit fuse before attempting any fault finding inside the unit.

Problem	Cause	Action
3 Water too cool or cold - *continued*	**3.3** Reduction in ambient water temperature.	**3.3.1** Aadjust flow rate to give reduced flow.
		3.3.2 Select high power.
	3.4 Electrical malfunction.	**3.4.1** Have unit checked by suitably qualified electrician or contact Customer Experience.
	3.5 Safety cut-out operated.	**3.5.1** Thermal safety cut-out device has operated. Have the unit checked by a suitably qualified engineer or contact Customer Experience.
4 Pressure relief device has operated (water ejected from PRD tube).	**4.1** Blocked shower head.	**4.1.1** Clean sprayplate and then fit a new PRD.
	4.2 Twisted/blocked shower hose.	**4.2.1** Check for free passage through hose. Replace hose if necessary and then fit new PRD.
	4.3 Shower head not removed while commissioning.	**4.3.1** Fit new PRD. Commission unit with shower head removed.
5 Low Pressure (START/ STOP button flashing).	**5.1** Low pressure condition.	**5.1.1** Insufficient water flow available. 1. Check filter is not blocked. 2. Check water supply to shower is adequate

NOTE: Identify cause of operation before fitting new PRD unit. When fitting a new PRD, follow the commissioning procedure. It is advised all electrical maintenance/repairs to the shower should be carried out by a suitably qualified person.

In the unlikely event of a fault occuring, please contact Customer Experience for advice. DO NOT remove the shower from the installation.

These fitting instructions are intended for use only with the following products:

Product Code	Description
HMOPA408W	Opal 4 8.5kW White
HMOPA409W	Opal 4 9.5kW White
HMOPA410W	Opal 4 10.5kW White
HMOPA408BLK	Opal 4 8.5kW Black
HMOPA409BLK	Opal 4 9.5kW Black
ARDANZ08W	Danzi 8.5kW White
ARDANZ09W	Danzi 9.5kW White
ARDANZ10W	Danzi 10.5kW White
ARDANZ08BLK	Danzi 8.5kW Black
ARDANZ09BLK	Danzi 9.5kW Black
REASTA81	ASTA 8.5kW White
REASTA91	ASTA 9.5kW White
REASTA11	ASTA 10.5kW White
REASTA83	ASTA 8.5kW Black
REASTA93	ASTA 9.5kW Black

To purchase a genuine Triton spare part for your product, please visit **www.tritonshowers.co.uk/spares** for product codes and prices. Alternatively please call our Customer Experience team on **024 7637 2222** to order direct. Please have your model name available.

WEEE Directive – Policy Statement

As a producer and a supplier of electric showers, Triton Showers is committed to the protection of the environment via our own environmental policy and compliance with the **WEEE directive**.

Triton Showers is fully registered with the Environment Agency under the following schemes:

Repic: Producer Takeback Scheme (PTS) registration number WEE/EJ3466QV

Valpak: Distributer Takeback Scheme (DTS) registration number DTS-501317-1

All our electric products are labelled accordingly with the crossed out wheeled bin symbol. This indicates, for disposal purposes at end of life, that these products must be taken to recognised collection points, such as local authority sites/local recycling centres; this will be free of any charges. **Do not return to Triton Showers.**

UK SERVICE POLICY

In the event of a product fault or complaint occurring, the following procedure should be followed:

DO NOT REMOVE THE PRODUCT

1. Telephone Customer Experience on **024 7637 2222** having available your details including post code, the model number and power rating of the product, together with the date of purchase and, where applicable, details of the particular fault.
2. If required, the Customer Experience Advisor will arrange for a qualified engineer to call.
3. All products attended to by a Triton service engineer must be installed in full accordance with the Triton installation guide applicable to the product. Every product pack contains an installation guide, however, they can also be downloaded free at www.tritonshowers.co.uk.
4. Our engineer will require local parking and if a permit is required, this must be available to the engineer on arrival at the call.
5. If loft access is required for isolation or to complete a repair, the loft must have a fixed access ladder and be boarded, with appropriate lighting from the access point to and around the repair area.
6. It is essential that you or an appointed representative, who must be over 18 years of age, is present for the duration of the service engineer's visit. If the product is in guarantee you must produce proof of purchase.
7. Where a call under the terms of guarantee has been booked and the failure is not product related (i.e. scaling and furring, incorrect water pressure, pressure relief device operation or electrical/plumbing installation fault) a charge will be made. A charge will also be issued if nobody is at the property when the service engineer calls or adequate parking/permit is not available.
8. If the product is no longer covered by the guarantee an up-front fixed fee will be charged before the site visit.
9. Your receipt must be retained as proof of purchase. Should proof of purchase not be available on an 'in-guarantee' call, or should the service engineer find that the product is no longer under guarantee, the engineer will charge the same fixed price and will request payment prior to departing. If payment is not made on the day an administration charge will be added to the fixed charge.
10. If a debt is outstanding from a previous visit, or from any other Triton purchase, Triton reserves the right to withhold service until the debt has been settled.
11. Triton takes the health, safety and wellbeing of its employees very seriously and expects customers to treat all staff members with respect. Should any employee feel threatened or receive abuse, either verbally or physically, Triton reserves the right to withhold service.

Replacement Parts Policy

In line with AMDEA guidelines, Triton retains functional spares for as long as there is a market for them and in most cases, well beyond. Due to the vast array of product types, the life cycle of products can vary and therefore so can the length of time parts can be supplied. Spare parts can be ordered via our online spare parts store or by telephoning Triton Customer Experience team on **024 7637 2222**. Payment should be made by credit / debit card (excluding American Express or Diners Card). Payment can also be made by pre-payment of a pro-forma invoice, by cheque or postal order.

Telephone orders are based on information given during the call. Before contacting Triton, please verify your requirements using the Triton website or your professional installer. Triton cannot accept liability for incorrect part identification.

TRITON UK STANDARD GUARANTEE

This guarantee applies only to products installed within the United Kingdom and does not apply to products used commercially. This guarantee does not affect your statutory rights.

With the exception of accessories, Triton guarantee the product against all manufacturing defects for a period of **2 years** (for domestic use only) from the date of purchase, provided that it has been installed by a competent person in full accordance with the fitting instructions.

All accessories such as shower heads, hoses and riser rails carry a **1 year** parts only guarantee against manufacturing defects.

Any part found to be defective during this guarantee period we undertake to repair or replace at our option without charge, so long as it has been properly maintained and operated in accordance with the operating instructions and has not been subject to misuse or damage. This product must not be taken apart, modified or repaired except by a person authorised by Triton.

What is not covered:

1. Breakdown due to:
   a) use other than domestic use by the property occupants;
   b) wilful act or neglect;
   c) any malfunction resulting from the incorrect use or quality of electricity, gas or water or incorrect setting of controls;
   d) failure to install in accordance with this installation guide.
2. Claims for missing parts once the product has been installed.
3. Repair costs for damage caused by foreign objects or substances.
4. Total loss of the product due to non-availability of parts.
5. Compensation for loss of use of the product or consequential loss of any kind.
6. Call out charges due to an abortive visit or where no fault has been found with the appliance.
7. The cost of repair or replacement of isolating switches, electrical cable, fuses and/or circuit breakers or any other accessories installed at the same time. Replacement of the Pressure Relief Device that only activates when the shower outlet is blocked is also excluded.
8. The cost of routine maintenance, adjustments, overhaul modifications or loss or damage arising therefrom, including the cost of repairing damage, breakdown, malfunction caused by corrosion, furring, frost or exposure to freezing conditions.
9. Callout charges where the water supply cannot be isolated, this includes consequential losses arising from unserviceable supply valves, or inaccessible product or valves located in a loft space without suitable access.

For the latest Terms & Conditions please see:
www.tritonshowers.co.uk/terms

PLEASE NOTE PRODUCT REGISTRATION IS ONLY AVAILABLE TO UNITS PURCHASED & INSTALLED IN THE UK

Triton Showers
Triton Road
Nuneaton
Warwickshire, CV11 4NR

Triton is a division of Norcros Group (Holdings) Limited

Customer Experience: 024 7637 2222
Trade Installer Hotline: 024 7637 8344
www.tritonshowers.co.uk
E-mail: serviceenquiries@tritonshowers.co.uk
E-mail: technical@tritonshowers.co.uk

Triton reserve the right to change product specification without prior notice. E&OE. © TRITON SHOWERS 2022