311671

MOLIDA Shower Range

Molida Concealed Dual Control Shower Pack Chrome

Specification

Finish/Colour:	Chrome Plated
Main Construction Material:	Brass; ABS
No of Controls:	2
Shower Type:	Dual Control
Shower Head Type:	Fixed Head
Shower Kit:	Adjustable Riser with Handset
Valve/Cartridge Type:	35mm Thermostatic Cartridge & 40mm Integral Diverter
Maximum Hot Water Supply Temperature °C:	60
Plumbing System Suitability:	Suitable for all plumbing systems, Ideally Balanced
Minimum Dynamic Pressure (bar):	0.2
Maximum Dynamic Pressure (bar):	5
Maximum Static Pressure (bar):	10
Connection Inlet:	15mm Compression
Connection Outlet:	G1/2"
Isolation Valve Included:	No
Check Valve Included:	Yes

Features:

- Keep your shower performing like new with rub-clean nozzles that wipe clean easily
- Easy installation with an adjustable faceplate that fits total wall depths from 60mm to 75mm for a perfect flush finish
- Supplied with everything you need, including shower valve with integral two outlet diverter, slimline 200mm round drench head with shower arm, shower kit with an adjustable riser rail plus a multi function handset and wall outlet
- Control your perfect shower experience with separate flow and temperature controls for precise adjustment
- Built to last, backed by a lifetime parts and 1-year labour guarantee

Dimensions (measurements in mm)

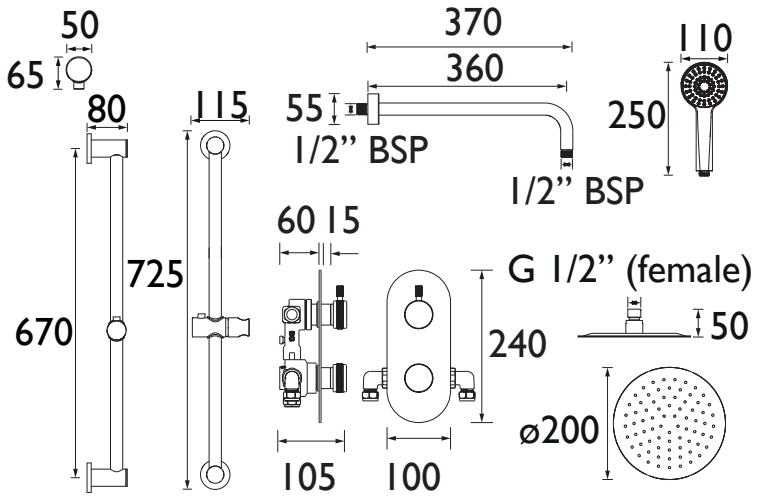

Product Certifications:

WRAS APPROVED PRODUCT

WRAS Certificate No: 250603301
WRAS Expiry Date: 30/06/2030

Unified Water Label 8.9 l/min

Flow Rates (l/min)

System Pressure (bar)	0.2	0.5	1	2	3	5
Through Fixed Head (mixed)	5.9	9.3	13.5	19.5	23.3	24.8
Fixed Head with Flow Limiters (mixed)	3.6	5.9	6.5	8.1	8.5	9.6
Through Handset (mixed)	3.1	5.8	8.7	12.9	16	21
Handset with Flow Limiters (mixed)	2.7	5	7.3	7.8	8.9	9.8

For more products, visit our website: http://www.bristan.com

TECHNICAL DATA SHEET

LIFETIME GUARANTEE *

BRISTAN

D4

Bristan, Birch Coppice Business Park, Dordon, Tamworth, B78 1SG. Web Site: www.bristan.com Telephone: 0330 026 6273. Email: enquire@bristan.com.

* **- Lifetime guarantee applies to products purchased on or after 01/04/2026.** See www.bristan.com/guarantees for more information. The information contained on this page was correct at date of issue. Listed flow rates are indicative for the product. Different plumbing systems and flow regulators can produce higher or lower results. Fitting Dimensions are provided as a guide only. Some variation may occur due to manufacturing tolerances. Bristan pursues a policy of continuous improvement in design and performance of its products and so reserves the right to change specifications without prior notice.