# BATHROOM FURNITURE FITTING GUIDE

**Please spend 5 minutes reading this section before commencing with the installation of your new furniture.**

**1**. Should any of your items have a defect, please do NOT install as returns will not be accepted once fitted.

**2**. We advise that you use a qualified person to install your units, as any issues relating to poor fitting will not be accepted by the supplier.

**3**. You have purchased a handmade and in some cases hand painted product. Therefore, you may see some slight imperfections which the supplier may deem as acceptable.

**4**. This product is water resistant but NOT waterproof. On no account should any spillages or splashes, even water, be allowed to lie on any surface. All spillages and splashes should be wiped dry, failure to do so may shorten the life expectancy of the product and invalidate any guarantees.

**5**. Please avoid direct sunlight as this will cause the painted surfaces to discolour.

**6**. Due to motion in transit, the cabinet doors and drawers may need to be adjusted after installation.

**7**. Floor Standing units must be fitted back to the wall through the backrail using suitable fixings. (not supplied)

**8**. Fitting of Basins.
Sit-on Basins - should be secured to the cabinet with a small 1/2" bead on silicone along the top edges of the cabinet.
Semi Recess and Inset Basins - Cut-out work surface to the template supplied. All raw edges must be adequately sealed against water ingress. Apply a thin continuous bead of silicone sealant around the outer edges of the basin.

**9**. Wall Hung units must be secured back to the wall using the wall hanging brackets or suitable wall fixings when not supplied. Additional support is recommended using 'L' brackets. (not supplied)

**10**. The hinge on the Laundry Basket can be adjusted by slackening the screw on the side of the sliding bar.

**11**. When fixing to a stud or panelled wall, appropriate frame work should be installed to support the basins and units.

**12**. Where units or worktops have to be cut-out for services, all raw edges MUST be sealed against water ingress.

**13.** To comply with current Building Regulations for Glass in building, Mirrors must be securely mounted no less than 800mm from the floor level. Care should be taken when installing and maintaining it.

## HINGE ADJUSTMENT

(Adjustment applies when door is mounted)

A - Vertical Adjustment
B - Horizontal Adjustment
C - In/Out Adjustment

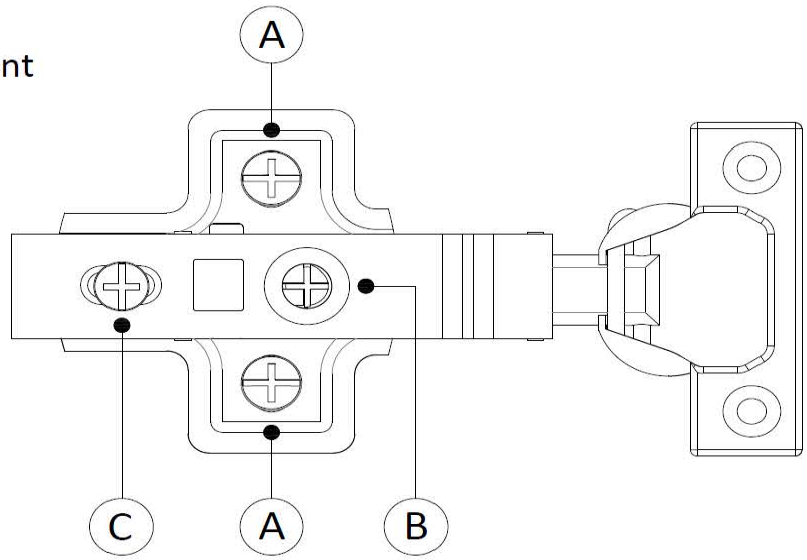

# BATHROOM FURNITURE CUSTOMER CARE GUIDE

**Please note that although these units have been designed to give years of pleasure and satisfaction, you will help maintain the original beauty of your bathroom by following these guide lines.**

**Melamine, Vinyl and Foil Wrapped Doors**
Occasional marks, can in most cases, be removed with a soft damp cloth. More persistent marks can be removed using a non silicone based furniture cleaner. Hot soapy water should be avoided. Once the mark is removed, the area should be wiped over with a damp cloth to remove any excess and dried with a soft clean cloth. On no account should solvent or an abrasive cleaner be used as permanent damage to the finish could take place.

**High Gloss Doors**
Use a cleaning product not containing aggressive substances like acetone, alcohol, bleach ... as those components could seriously damage the surface of the door. The best would be to use a soft cotton or micro fibre cloth with only water and soft soap (containing a maximum 1% of liquid soap)

**Carcase Components**
Do not use polish on any surfaces. A damp cloth with soapy water will clean off most marks or spills. Bleaches, scouring pads and multi-surface cleaners should not be used.
Any exposed carcase components have been treated to prevent any water ingress.

**Drawers, Runners, Door Hinges**
These should be wiped out with a damp soapy cloth and wiped dry with a soft cloth as necessary. The roller runners and hinges are lubricated and should not be cleaned with a degreasing agent as this will affect the action of the moving parts. Never lean on partially or fully opened doors and drawers in order to gain access to the units. The hinges are specified to adequately support the weight of the door, plus small additional weights such as wire accessories. It is advised that once the bathroom has been installed you should check every six months that all screws on the hinges are tight.

**Worktops**
Although the worktop is hard wearing, sharp objects will scratch and excessive heat will scorch the surface. Care should be taken not to drop any heavy objects onto the worktop as the surface may crack.
For cleaning, a damp soapy cloth will clean off most spills. Bleaches, scouring pads and multi-surface cleaners should not be used. Corrosive liquids and make-up should be wiped off immeadiately. On no account should any spillage, even water, be allowed to lie on the surface.

**Temperature and Humidity**
Avoid excessive change in temperature and humidity. Always try to ensure adequate ventilation.

**General care, spillages and splashes**
On no account should any spillages or splashes, even water, be allowed to lie on any surface.
All spillages and splashes should be wiped dry, failure to do so may shorten the life expectancy of the product and invalidate any guarantees.

**Regulations**
If it is your intention to remove and replace your bathroom fittings with "like for like" units, then this is classed as "non regulated" and no building regulations would be required. However, building regulation approval may be requied if the bathroom refurbishment involves altering the drainage or the internal layout within the dwelling to accomodate the new fitting such as a second bathroom. In this instance, we would advise you to contact the Building Control Department at your local autority to discuss the need for a formal building regulation application.
Macerator - Current building regulations specify that a sanipump smallbore system can be fitted in a dwelling where there is also a normal gravity discharge W.C. It should not be the only W.C. facility.
Electrical - Remember that double pole isolating switches are required for all electrical points apart from special razor sockets. All work must conform to BS7671: 2008 the current I.E.E. Regulations.

# FURNITURE INSTRUCTION

THIS INSTRUCTION COVERS A VARIETY OF TOPICS TO HELP WITH YOU INSTALLATION.

## DRAWER BOX ADJUSTMENT

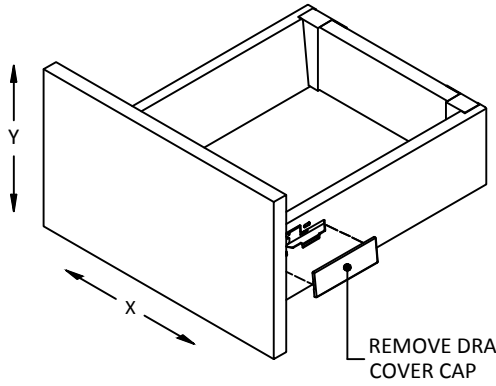


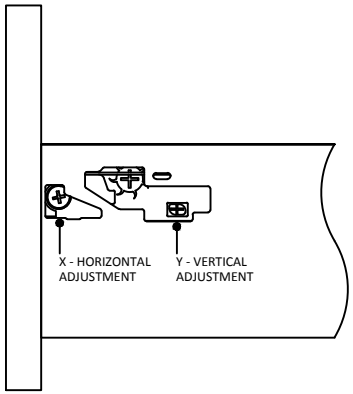


## DOOR DRILLING

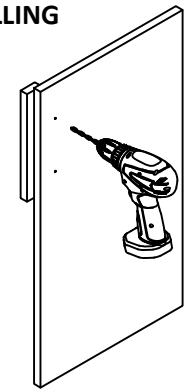

Doors are supplied un-drilled for handles/knobs so that the end user can create the exact look that they want to achieve.

Select your desired handle position. Always measure twice before drilling to make sure that the handles will be in the correct position. Check that hinges and internal components are not in the way of where handles will be drilled.

Using a 5mm drill bit, drill through the reverse of the fascia into a scrap piece of wood to help prevent splintering.

NOTE: DRILLED DOORS CANNOT BE RETURNED

## HINGE ADJUSTMENT

Adjustment applies when door is mounted.
Note - the hinge type will vary depending upon the furniture purchased.

A - VERTICAL ADJUSTMENT
B - HORIZONTAL ADJUSTMENT
C - IN/OUT ADJUSTMENT
D - ADDITIONAL SCREWS ARE SUPPLIED WITH THE MIRRORS CABINETS.
IT'S HIGHLY RECOMMENDED THAT THEY ARE FITTED DUE TO THE WEIGHT OF THE MIRRORED DOORS.

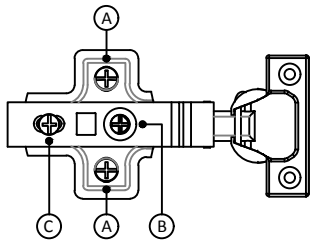


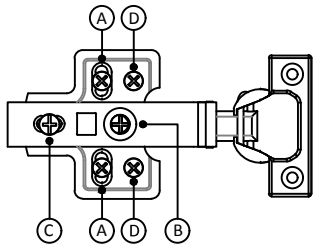


## MIRROR CABINETS

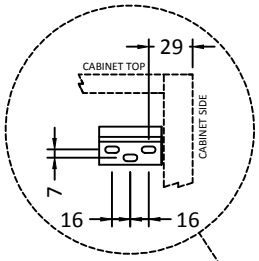


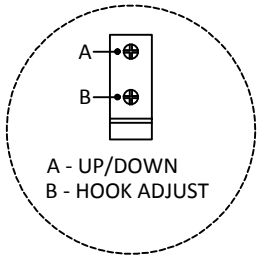


Multiple cabinets can be fitted together to create a run.
Fix through to the adjacent cabinet using screws (not supplied).
Screw heads can be hidden by fixing behind the hinge plates and shelves.

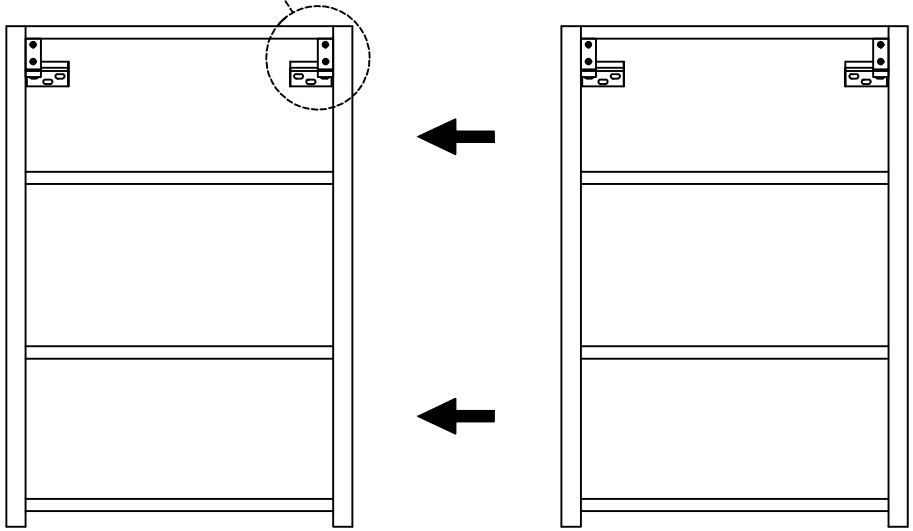

## FITTING CATERPILLAR WALL HANGING BRACKETS

Insert brackets into pre-drilled holes in the end panel. (Note, the hook should face the wall side for hanging) Ensure that the fixing tab is in the upright position.

To secure the bracket, simply pull down the metal locking tabs to lock into position.

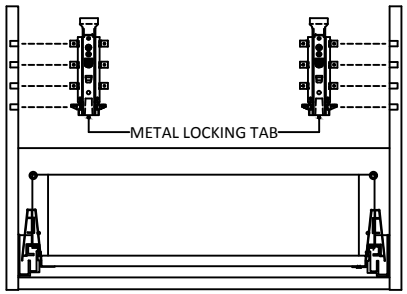


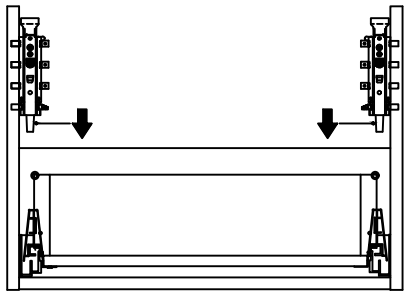

## FIXING WALL HANGING PLATES
(Caterpillar Wall Brackets)

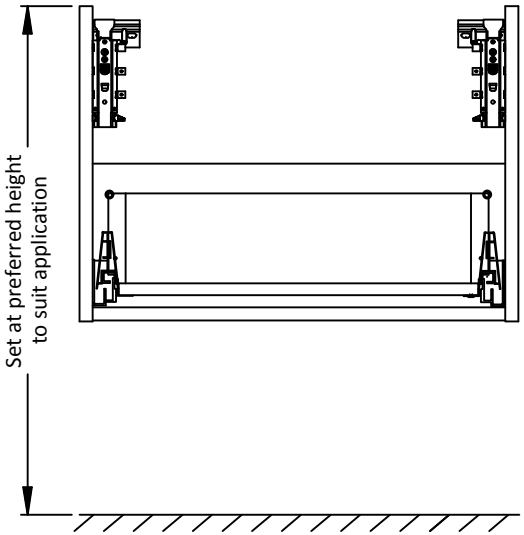


Fix Wall Hanging Plates as shown above. Check the type of wall you are fixing into and use suitable fixings (Not supplied).

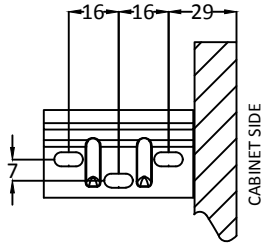


You may need to lengthen the hook's protrusion. To do so, turn screw 'B' anti-clockwise.
Tighten screw 'B' to fit the cabinet to the wall. You may need to make some fine adjustments once the cabinet is fitted. Turn screw 'A' clockwise for DOWN and anti-clockwise for UP.

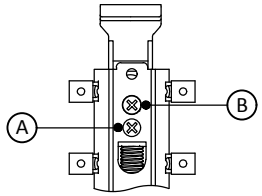


## REMOVING DRAWER

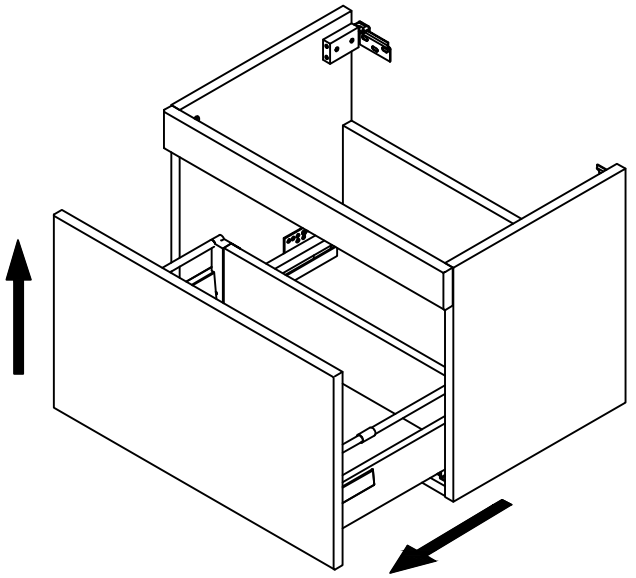

Remove drawer from cabinet prior to fitting unit to the wall. Pull-out the drawer to it's full extension and gently lift the drawer box upwards until it disengages from the runner.

## FIXING WALL HANGING PLATES
(Standard Wall Brackets)

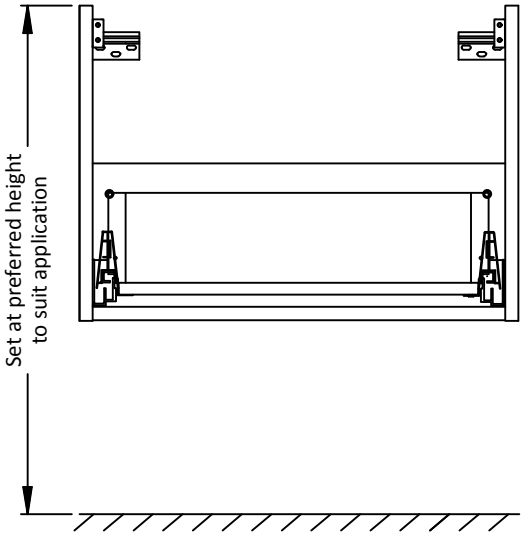


Fix Wall Hanging Plates as shown above. Check the type of wall you are fixing into and use suitable fixings (Not supplied).

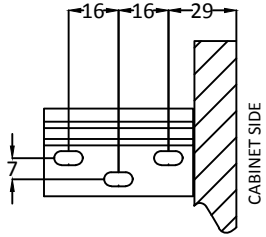


You may need to lengthen the hook's protrusion. To do so, turn screw 'B' anti-clockwise.
Tighten screw 'B' to fit the cabinet to the wall. You may need to make some fine adjustments once the cabinet is fitted. Turn screw 'A' clockwise for DOWN and anti-clockwise for UP.

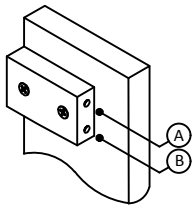


## RE-FIT DRAWER

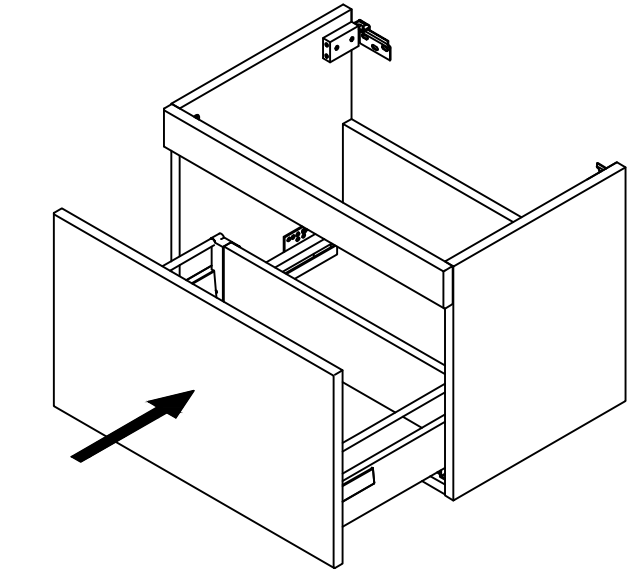

To re-fit the drawer, fully extend the drawer runners and locate drawer box on to runners. Push the drawer box fully home until you here a 'click'. The drawer drawer should now be correctly located onto the runners.

# CUT OUT INSTRUCTION FOR W.C. UNITS

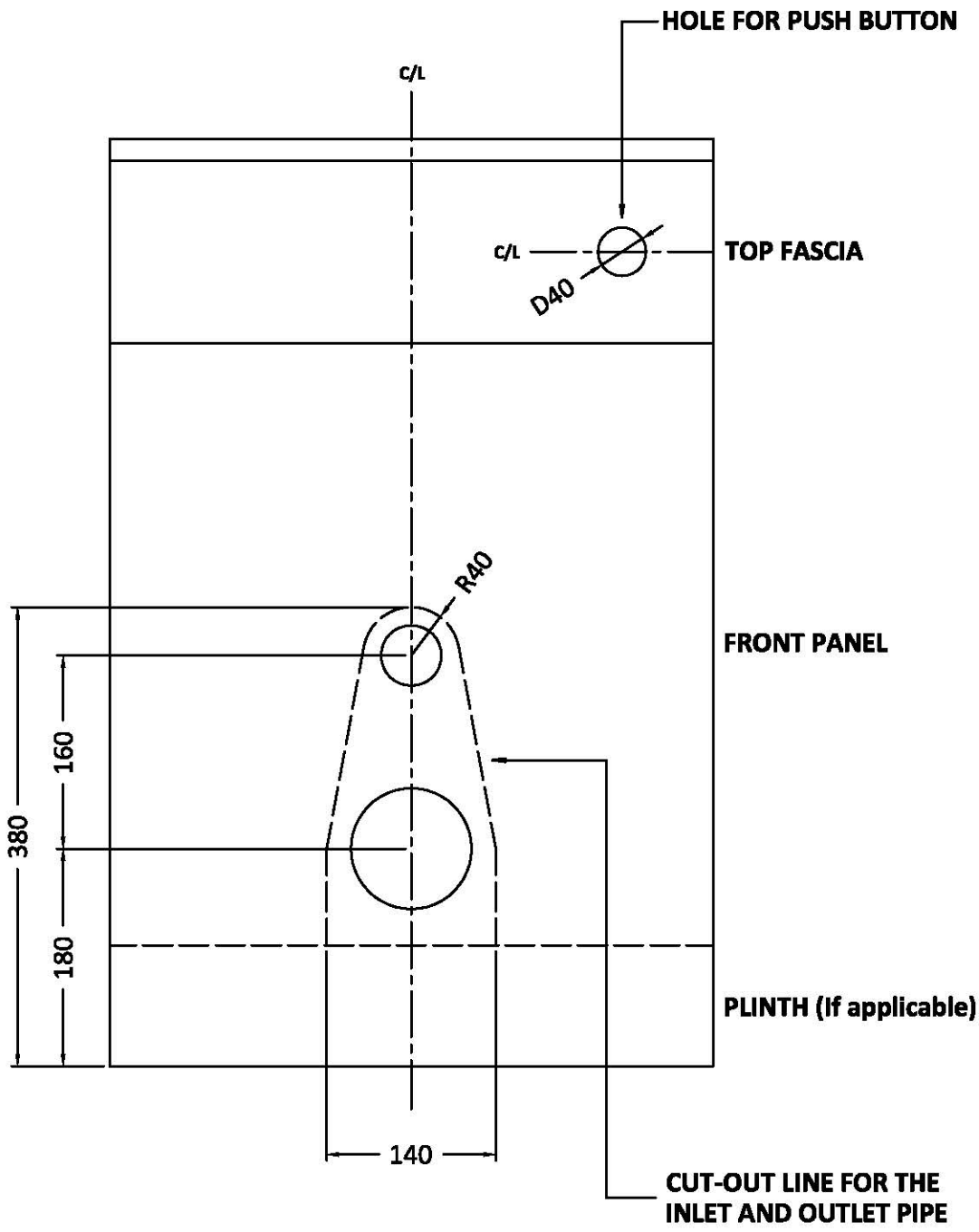


**MARK OUT THE OPENING ON THE FRONT PANEL FOR THE INLET AND OUTLETS OF THE W.C. PAN. FOLLOWING THE ABOVE DIMENSIONS, CHECK THE SIZE AGAINST THE PAN BEFORE CUTTING OUT. DO NOT CUT OUT THE BOTTOM PLINTH!**

**THE PUSH BUTTON CAN BE POSITIONED ON THE FRONT FASCIA LEFT, RIGHT OR CENTRAL. THE DRAWING SHOWS A SUGGESTED POSITION BEING ON THE RIGHT HAND SIDE. MARK THE CENTRE POINT IN YOUR DESIRED POSITION AND DRILL A 40mm DIAMETER HOLE. FIX THE BUTTON ENSURING THAT THE CABLE IS NOT KINKED OR BENT.**

**ANY CUT SURFACES/EDGES NEED TO BE SEALED AGAINST WATER INGRESS.**

**172010**