Sales Code: 332879 **Barcode:** 5056211829300 **Brand:** Balterley **Description:** Balterley White 3 Column Horizontal Designer Radiator - 600 x 777mm

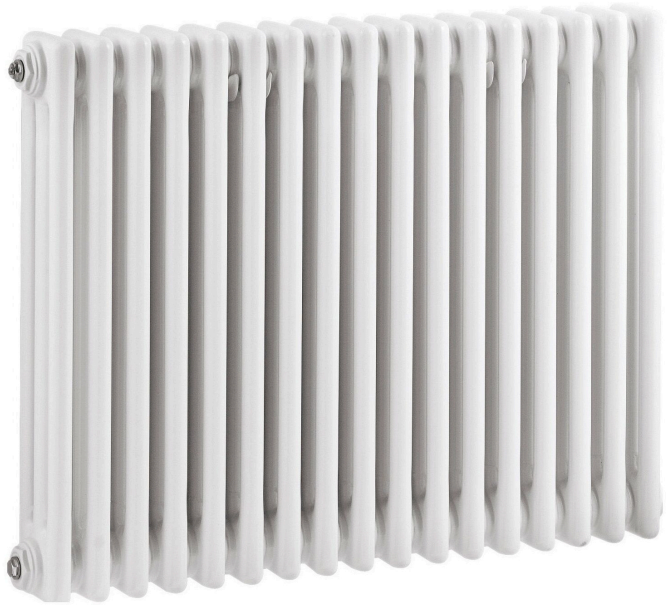

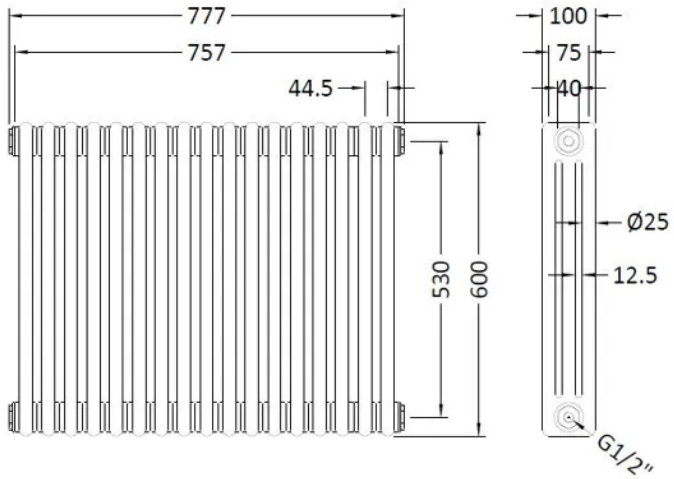

Product Dimensions

Product	600 x 777 x 100mm (H x W x D)
Packaged	140 x 650 x 825mm (H x W x D)
Nett Weight	29.5 kg
Packaged Weight	32 kg

Packaging Details

Box Qty	1
Label Size (mm)	50 x 100
Label Colour	White
Label Qty	2.0000

Product Details

Country of Origin	China
Product Material	Steel
Colour/Finish	White
Mount Type	Floor,Wall Hung
Style	Contemporary
Pipe Centres	651
Brackets Included	Yes
Btu Output 30	1765
Btu Output 50	3348
Ce Certified	Yes
Declaration Of Performance	Yes
Fuel Type	Water
Maximum Projection	180 mm
Number Of Heat Settings	1.0000
Rohs Certification	No
Thermal Output 30	517.0000 Watts
Thermal Output 50	981.0000 Watts
Tube Diameter	25 mm
Ukca Certified	No
Wall To Centre Tappings	75 mm
Weee Certification	No
Guarantee	5 Years

© BALTERLEY