# GENERAL FITTING GUIDE
# for RADIATORS

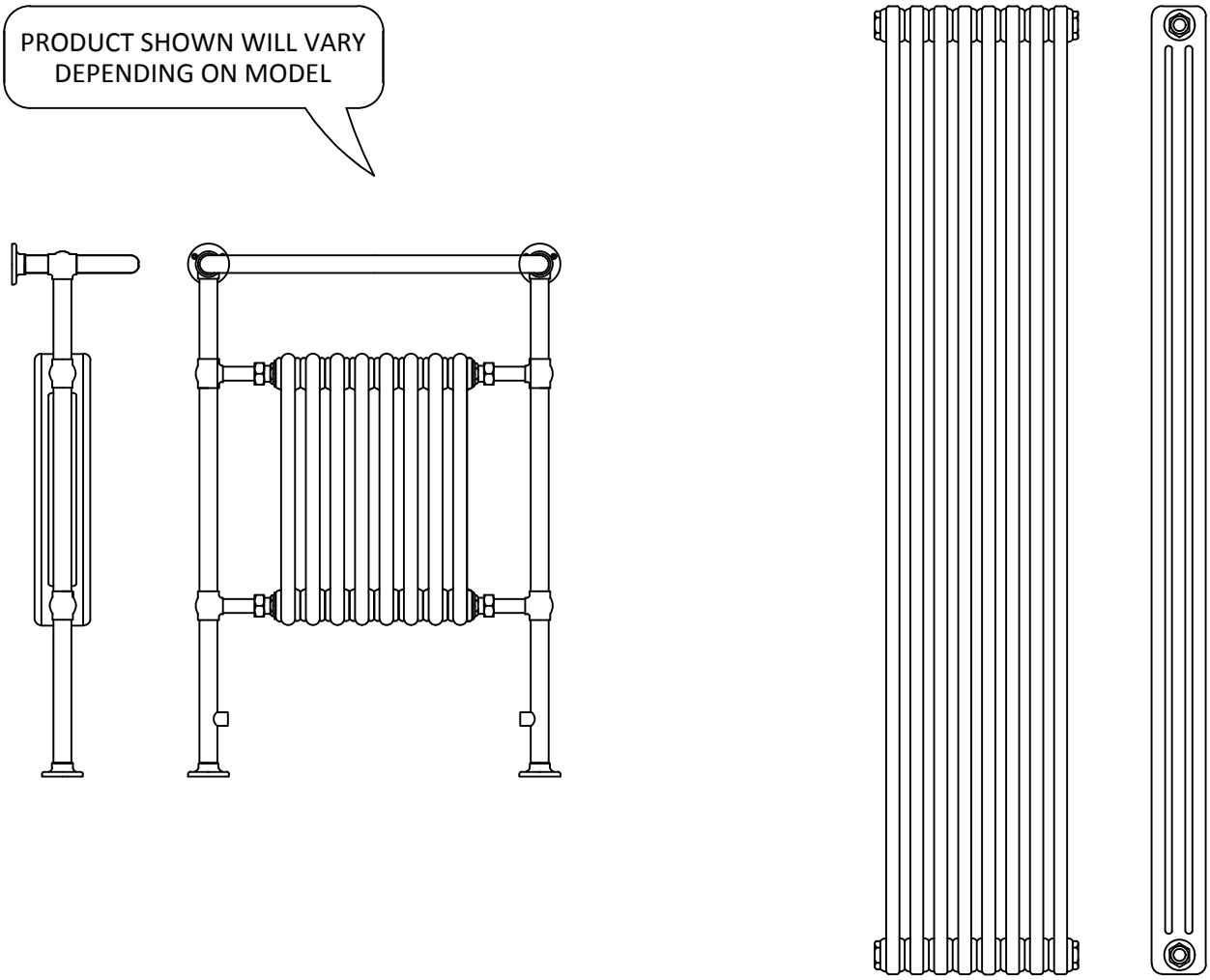


## GUARANTEE & AFTERCARE

When installing or using tools, extra care must be taken to avoid damaging the finish or fitting.
To maintain the appearance, please ensure it is cleaned regularly using a clean soft damp cloth only.
Abrasive cleaners or detergents must not be used as they may cause surface deterioration.
The company provides a guarantee against faulty material or manufacture excluding serviceable parts, providing they have been installed, cared for and used in accordance with our instructions.

This product complies to all current CE regulations.

The company reserves the right to continually evolve its product lines without notification.
The company will not accept any liability regarding specification changes and their consequences unless previously quoted by the company in writing.

## INSTALLATION PROCEDURE

**Before Commencing, Please Note:**

Please make sure you first flush your central heating system with a suitable central heating cleanser, which will remove any debris from your central heating system.
Your next step is to add a suitable central heating inhibitor to your central heating system which will enhance the radiators performance, as well as extending the life span of your system.
NB: Not following these basic steps could lead to internal damage being caused to the radiator, which in turn could cause leaks, and subsequently invalidate any product guarantees

**General Notes - Please Read Before Installation:**

- This product is only suitable to be installed within a sealed central heating system
- This product must be installed by a suitably qualified professional, or other fully competent person, and in accordance with any current relevant British / European standards
- Please check the radiator is the correct size, before removing from the packaging
- Once you have removed the radiator from the packaging, please check that you have not discarded any fixing kits / brackets.
- Please make sure you have all the necessary tools to complete the installation, these may include:
- Drill & suitable drill bits, tape measure, adjustable spanner, pencil, screwdrivers and PTFE tape.
- To maintain healthy air quality, it is recommended to have adequate ventilation in all rooms where radiators are being used, for example opening a window.

NB: Depending on the site conditions for the installation, extra tools may be required. Before drilling any walls or floors, please make sure you check for any concealed pipes or wires that may get damaged.
Do not **over tighten** any fixings brackets, vents or radiator valves as this could cause damage.

**If Fitting Your Radiator Horizontally:**

Some radiators are suitable to be installed horizontally as well as vertically. If you are choosing to install your radiator horizontally, you will need to check if there is a baffle fitted inside the flow inlet tube. If a baffle is fitted, you will need to open the baffle flow block which will open up the water way to ensure the hot water flows correctly through the radiator. This can be done by using a hammer and 10mm steel rod as shown in the illustration.

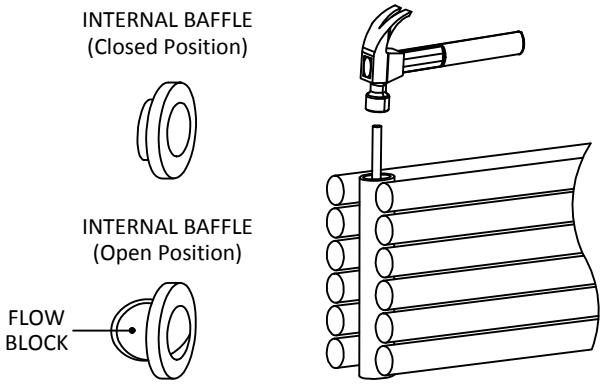


**Installation:**

- Make sure the chosen fixing area for the radiator is strong enough to hold the weight of the radiator.
- Mark out the hole positions for the screws on the wall / floor for the fixing brackets. Please check how many holes require drilling to correspond to the fixings brackets for this model.
- Drill suitable holes in the wall / floor to suit the rawl plugs. NB you may need to use different rawl plugs depending on the area you are fixing the radiator to.
- Fit the rawl plugs (or other suitable fixings) into the wall / floor.
- The fixing brackets for each radiator differ, attach as appropriate to the radiator / fixing points and secure.
- As appropriate, screw the blanking plug and air vent plug to the radiator top connectors using an adjustable spanner. Make sure these are water tight connections, if necessary using PTFE tape.
  ***NB on some models the blank & air vent plug may be supplied already attached to the radiator.***
- Assemble the radiator valves (not supplied) to the radiator and secure the radiator to the fixing area, if necessary using PTFE tape to ensure a water tight connection.
- Connect he radiator valves to the water supply, fill the system and check for any leaks.
- Check radiator is getting up to full temperature. If necessary, use the air vent plug to release any trapped air.

**Troubleshooting:**

When you have added a radiator to your existing system and it is only cold or not fully heating up, please check the following:

- It might sound obvious but first check that you have turned on your heating.
- Check the boilers model/type? It may not have enough capacity to supply the requirements of the additional radiator. (Contact your boiler manufacturer for guidance if necessary).
- Has the system water level been topped up adequately to compensate for the new radiator?
- If the pipe work gets hot and the radiator not, you may have an air lock in the system. Try removing any trapped air using the air vent plug.
- If the pipework is not getting hot you may have a blockage preventing circulation. Locate blockage and clear.
- If the radiator only heats up partially firstly check both radiator valves on the sides of the radiator are open, and if a thermostatic valve is fitted, remove the top and check the operating pin moves freely.
- It may also be that the water flow is crossing over the bottom of the radiator before the radiator fills, so slow down the flow on the return valve side and this will help the filling of the radiator.
- It's possible to fit a baffle to the inlet on certain types of radiator. The idea of this baffle is to encourage the water to flow in a vertical direction thus filling the radiator to allow it to fully heat up.