balterley

CUSTOMER DATA SHEET - HEATING

SALES CODE:	BHRV202	DESCRIPTION:	Angled Thermo Wheel Rad Valve Chrome

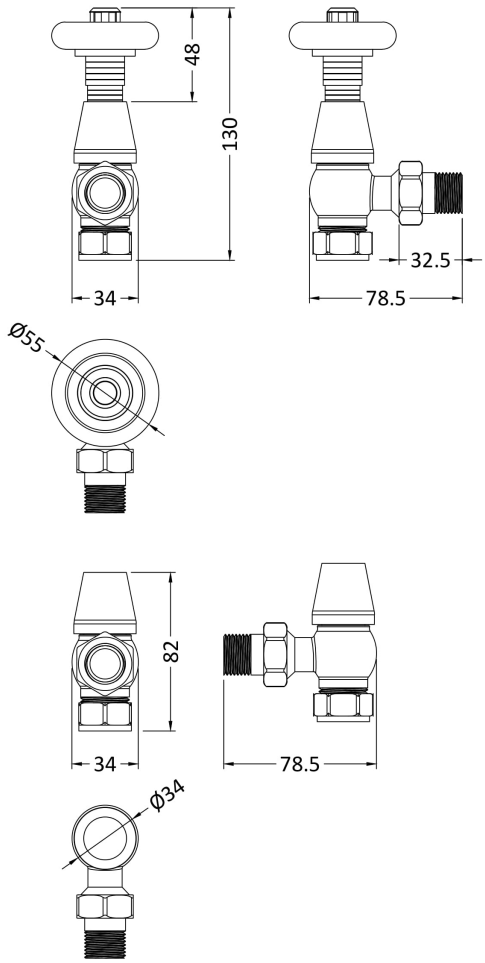

PRODUCT DIMENSIONS				
Height (mm)	Width (mm)	Depth (mm)	Length (mm)	Nett Wgt Kg
131	55	97		0.83

PACKAGING DIMENSIONS			
Height (mm)	Width (mm)	Length (mm)	Gross Wgt Kg
1850	145	85	0.83

PACKAGING DATA			
Box Colour	White Cardboard Box		
Box Qty	1	Label Colour	White Label
Label Size	100 x 50	Label Qty	1

OUTER BOX DIMENSIONS (If Applicable)			
Height (mm)	Width (mm)	Length (mm)	Gross Wgt Kg
Barcode	5056211829546		

PRODUCT DETAILS

Contry of Origin	United Kingdom					
Fitting Instruction						
RAL No	N/A					
Heat Element Wattage	Not Applicable					
BTU Outputs	30°C	N/A	50°C	N/A	60°C	
Pipe Centres - If Vertical	N/A					
Pipe Centres - If Horizontal	N/A					
Packaging Volume (L)	N/A					
Wall to Ctr of Tappings	N/A					

Certification	CE & UKCA	N/A	RoHS	N/A	WEEE	No
Colour/Finish	Chrome					
Product Material	Brass					
Heat Element Wattage Compatible	N/A					
Thermal Outputs (Watts)	30°C	N/A	50°C	N/A	60°C	
Max Projection						
Tube Diameter	15mm					
Floor to Ctr of Tappings	N/A					
Dual Fuel	N/A					