Prior to Installation

- Check that all of the parts are enclosed as per the contents list.
- If there are any missing or damaged parts please contact your supplier immediately.
- The four plastic caps on each corner of the ladder rail should be removed ang disposed of.
- Ensure that the ladder rail is positioned so that it can be easily connected to the central heating system.

Assembly

1 Select your desired installation position and ensure that the wall is sufficiently strong enough to hold the weight of the ladder rail. Brick or breezeblock walls are ideal. If positioning on plaster-board wall it MUST be fixed to timber batons.

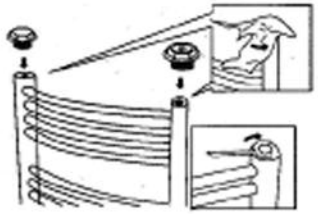

2 Screw the blanking plug **B** and air vent plug **C** into the top two threads in the upright channels of the ladder rail **A**. They can fitted on either side. Using a cloth to prevent scratching, tighten with a spanner. Apply PTEE tape.

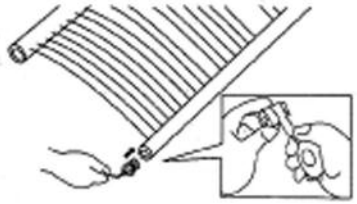

3 Thread the tails from the radiator valves (not supplied) into the bottom two threads. Apply PTFE tape.

4 The wall supports should be fitted at approximately 10cms from the inside edge of the ladder rail - 2 near the top of the ladder rail and 2 near the bottom. The mounting height can be varied between any of the ladder rail bars to allow for finding the best fixing point on the wall. Mark the fixing points with a pencil.

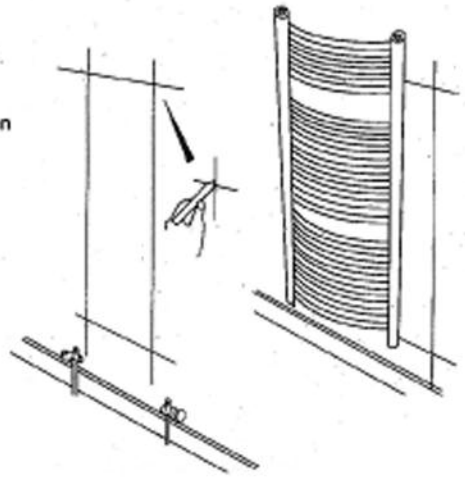

5 Mounting to Brick or Breezeblock
At the required fixing positions drill hole using 8mm masonry bit and insert the wall plug **E** into the hole ensuring it's flush with the wall. Place long screw **F** through the centre of the wall support **D** and tighten into the wall plug.

Mounting to Wood
Place long screw **F** through the centre of the wall support **D** and screw into the wooden baton at the required fixing positions.

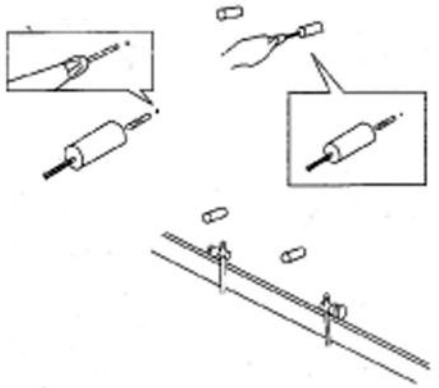

6 Place the spacer **H** inside the wall support and insert the small screw **G** into the hole in the wall support. Don't over-tighten to allow for adjustment later.

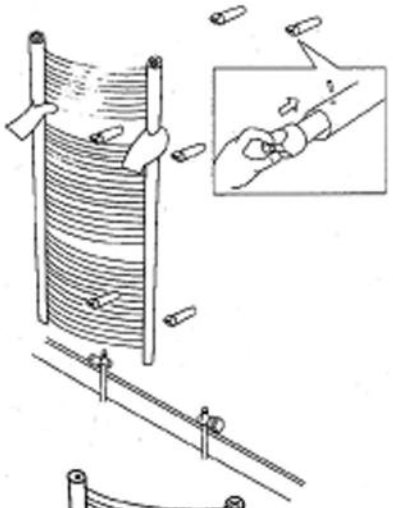

7 Offer the ladder rail **A** up to the fixing brackets and place bolt **J** through the bracket bush **K**.



Place the bolt between the selected ladder rail bars and thread into the wall support ensuring the square face of the bracket bush is aligned with the ladder rail.

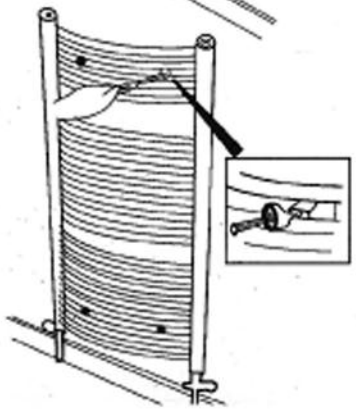

8 Push the rail flat against the wall, adjust to required depth and tighten the small screws to secure. Push the end caps I over each of the bracket heads until they click into position.

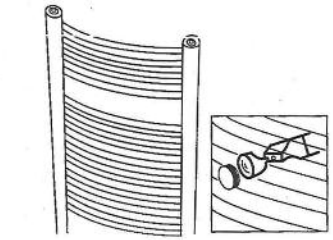

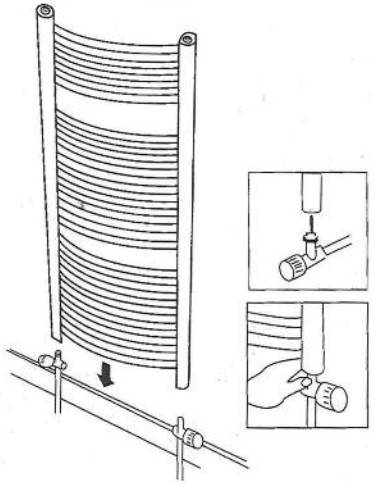

9 Connect the radiator valve tail to the radiator valve and tighten securely. Apply PTEE tape.

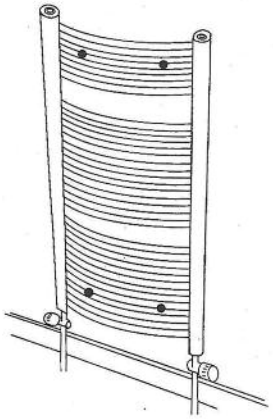

Important

- Ensure that your central heating system is thoroughly flushed before use to rinse out any foreign residues.
- Wipe the surface clean with a soft, damp cloth. Never use abrasive cleaners on this product as they will damage the surface.
- It is recommended that a suitable inhibitor be added to the central heating system to help prevent internal corrosion and limescale build-up.

Assembly Instructions for Ladder Rail

Contents List

Ref		Description	Quantity
A	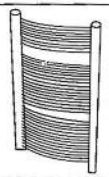	Ladder Rail	1
B		Blanking Plug	1
C		Air Vent Plug	1
D		Wall Support	4
E		Masonry Wall Plug	4
F		Long Screw	4
G		Small Screw	4
H		Spacer	4
I		End Cap	4
J		Cross Bolt	4
K		Bracket Bush	8
L		Rubber Ring	4

Tools Required (not supplied)

	Description
	PTFE Tape
	Large Flat Screwdriver
	8mm Masonry Bit or 3mm Wood Bit
	Socket Set
	Spanner
	Clean Cloth