BAYSWATER

London W.2

BATHROOM FURNITURE CARE GUIDE

1. Should any of your items have a defect, please do NOT install as returns will not be accepted once fitted.
2. We advise that you use a qualified person to install your units, as any issues relating to poor fitting will not be accepted by the supplier.
3. You have purchased a handmade and in some cases hand painted product. Therefore, you may see some slight imperfections which the supplier may deem as acceptable.
4. This product is water resistant but NOT waterproof. On no account should any spillages or splashes, even water, be allowed to lie on any surface. All spillages and splashes should be wiped dry, failure to do so may shorten the life expectancy of the product and invalidate any guarantees.
5. Please avoid direct sunlight as this will cause the painted surfaces to dis-colour.
6. Due to motion in transit, the cabinet doors and drawers may need to be adjusted after installation.
7. Some of the larger cabinet are fitted with a support on the underside for transportation only. Please remove prior to fitting the cabinet.
8. Floor Standing units must be fitted back to the wall through the backrail using suitable fixings (not supplied).
9. To comply with current Building Regulations for Glass in building, Mirrors must be securely mounted no less than 800mm from the floor level. Care should be taken when installing and maintaining it.

Please note that although these units have been designed to give years of pleasure and satisfaction, you will help maintain the original beauty of your bathroom by following these guide lines.

Painted Doors
Use a cleaning product not containing aggressive substances like acetone, alcohol, bleach ... as those components could seriously damage the surface of your furniture. The best would be to use a soft cotton or micro fibre cloth with only water and soft soap (containing a maximum 1% of liquid soap)

Painted Carcase Components & Bath Panels
Do not use polish on any surfaces. A damp cloth with soapy water will clean off most marks or spills. Bleaches, scouring pads and multi-surface cleaners must not be used.

Door Hinges
These should be wiped out with a damp soapy cloth and wiped dry with a soft cloth as necessary. The hinges are lubricated and should not be cleaned with a degreasing agent as this will affect the action of the moving parts.
Never lean on partially or fully opened doors in order to gain access to the units. The hinges are specified to adequately support the weight of the door. It is advised that once the furniture has been installed you should check every six months that all screws on the hinges are tight.

Marble Worktops
Although the worktop is hard wearing, sharp objects will scratch and excessive heat will scorch the surface. Care should be taken not to drop any heavy objects onto the worktop as the surface may crack. For cleaning, a damp soapy cloth will clean off most spills. Bleaches, scouring pads and multi-surface cleaners should must not be used. Corrosive liquids and make-up should be wiped off immediately. On no account should any spillage, even water, be allowed to lie on the surface.

Temperature and Humidity
Avoid excessive change in temperature and humidity. Always try to ensure adequate ventilation.

Spillages and Splashes
On no account should any spillages or splashes, even water, be allowed to lie on any surface. All spillages and splashes should be wiped dry, failure to do so may shorten the life expectancy of the product and invalidate any guarantees.

Regulations
If it is your intention to remove and replace your bathroom fittings with "like for like" units, then this is classed as "non regulated" and no building regulations would be required. However, building regulation approval may be required if the bathroom refurbishment involves altering the drainage or the internal layout within the dwelling to accommodate the new fitting such as a second bathroom. In this instance, we would advise you to contact the Building Control Department at your local authority to discuss the need for a formal building regulation application. Macerator - Current building regulations specify that a sanipump smallbore system can be fitted in a dwelling where there is also a normal gravity discharge W.C. It should not be the only W.C. facility. Electrical - Remember that double pole isolating switches are required for all electrical points apart from special razor sockets. All work must conform to BS7671: 2008 the current I.E.E. Regulations.

The company reserves the right to continually evolve its product lines without notification. The company will not accept any liability regarding specification changes and their consequences unless previously quoted by the company in writing.

FURNITURE FITTING INSTRUCTION

This instruction covers a variety of topics to help with your installation.
Handle Drilling, Hinge Adjustment & Wall Hanging

HANDLE DRILLING (TALL UNIT ONLY)

The door is already part drilled for the handle. Before drilling for the handle, select the required hanging (LH/RH). Using a 5mm drill bit, drill through the reverse of the fascia into a scrap piece of timber to help prevent splintering.
Note: Drilled doors cannot be returned.

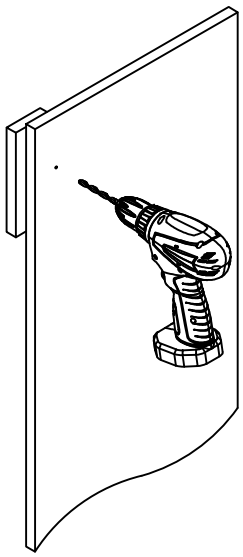

HINGE ADJUSTMENT

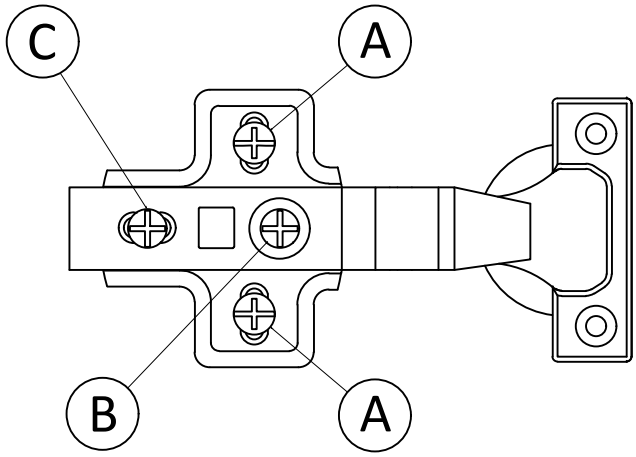

A - Adjusts Door Vertically
B - Adjusts Door Horizontally
C - Adjusts Door In/Out

MIRROR CABINETS

1. Fix wall hanging plates as shown below. Check the type of wall you are fixing to and use suitable fixings (not supplied).

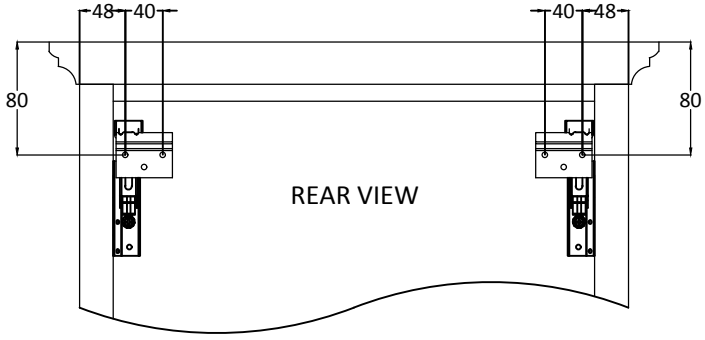

2. You may need to increase the hooks protrusion. To do this turn screw 'A' anti-clockwise.
   Once located onto the wall hanging plates, turn screw 'A' clockwise to fix the cabinet to the wall.

3. You may need to do some fine adjustments once cabinet is fixed.
   Turn screw 'B' anti-clockwise for UP and clockwise for DOWN.

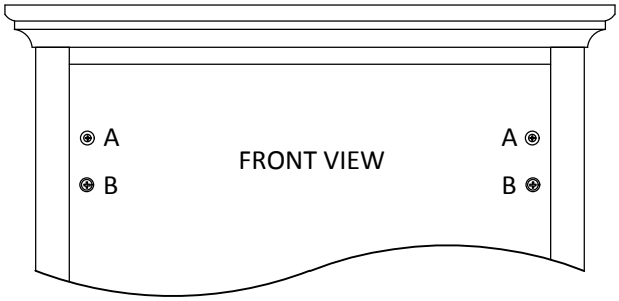

MARBLE TOP
FITTING & CARE GUIDE

PLEASE READ ALL THE INSTRUCTION FULLY BEFORE PROCEEDING.

WE HAVE TAKEN GREAT CARE TO ENSURE THAT THIS PRODUCT REACHS YOU IN GOOD CONDITION. HOWEVER SHOULD ANY PARTS BE DAMAGED OR MISSING PLEASE CONTACT YOUR LOCAL BRANCH.
WHEN FITTING, MAKE SURE TO PROTECT THE SURFACE FINISH AGAINST SCRATCHES AND MARKS THAT CAN BE CAUSED BY INSTALLATION OR ANY ROUGH SURFACES.
FIT ANY ADDITIONAL PRODUCTS SUCH AS THE WASTE AND TAPS (NOT SUPPLIED) AS PER THE MANUFACTURE'S INSTRUCTIONS.
NO REFUNDS OR REFITTING COST WILL BE GIVEN IF INCOMPLETE OR DAMAGED GOODS ARE FITTED.

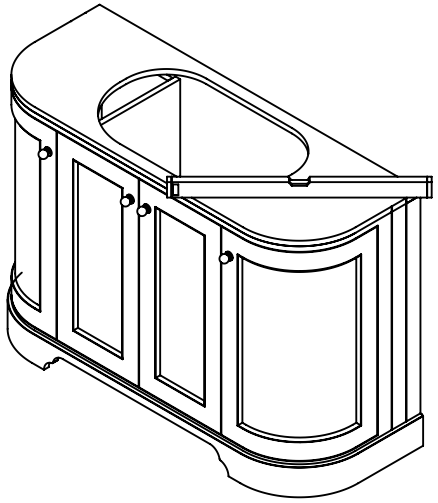

1 MAKE SURE THAT THE CABINET IS LEVEL AND FLUSH BEFORE PROCEEDING WITH ANY INSTALLATION.

IF ANY FURTHER WORK AROUND THE PRODUCT NEEDS TO BE CARRIED OUT, SUCH AS TILING OR FITTING OF A MIRROR, PROTECT SURFACES WITH A COVER OR AN OLD BLANKET.

2 ENSURE ALL SURFACES THAT ARE GOING TO COME INTO CONTACT WITH THE SILICONE ARE CLEAN AND DIRT FREE.

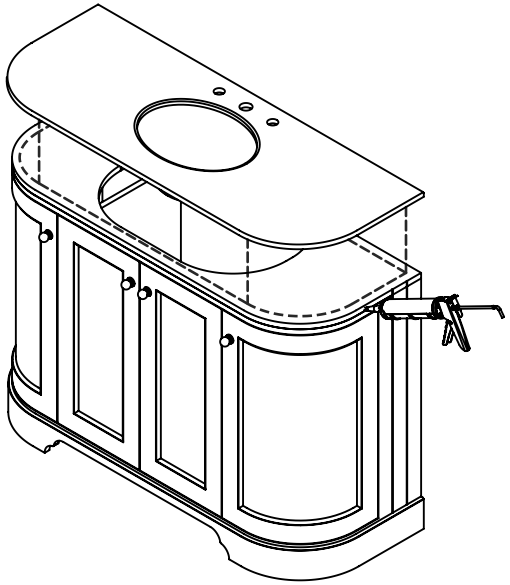

3 RUN A SMALL BEAD OF SILICONE AROUND THE TOP EDGES OF THE CABINET WHERE THE TOP & BASIN SITS. YOU MAY ALSO WANT TO APPLY SOME EXTRA SILICONE OVER THE CABINET'S TOP.

CAREFULLY PLACE THE TOP & BASIN ONTO THE CABINET ENSURING ALIGNMENT IS CORRECT.

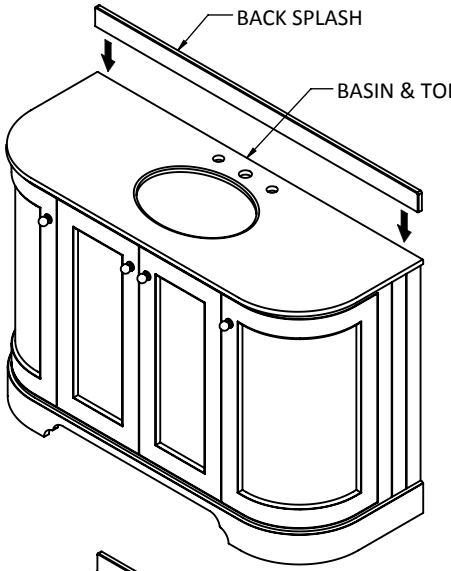

4 IF YOUR BACK SPLASH IS LOOSE, PLACE THE BASIN AND TOP INTO POSITION ON THE CABINET ENSURING LEVEL AND SQUARE.

RUN A BEAD OF SILICONE ALONG THE UNDER SIDE OF THE BACK SPLASH AND GENTLY POSITION AS REQUIRED.

CLEAN ANY EXCESS SILICONE USING A SOFT DAMP CLOTH AND COMMON DETERGENT.

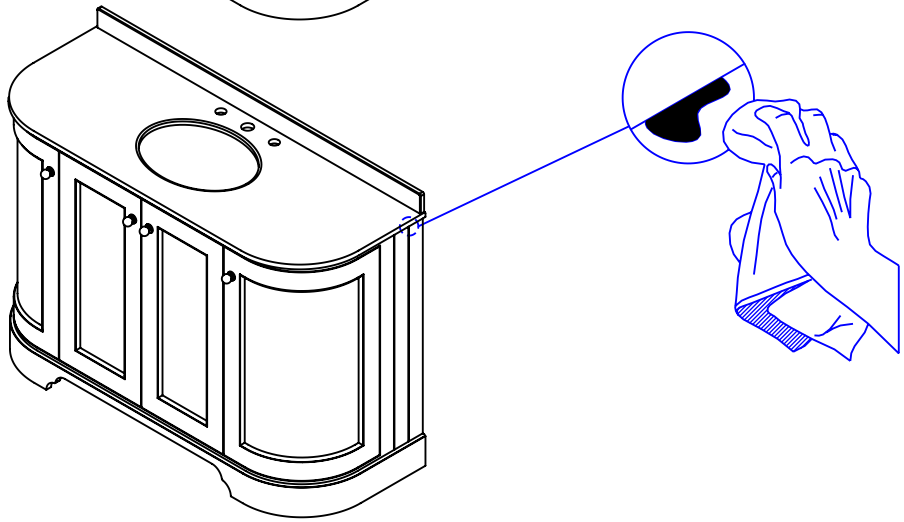

5 ANY EXCESS SILICONE SHOULD BE CLEANED USING A SOFT DAMP CLOTH WITH COMMON DETERGENT.

DO NOT USE AN ABRASIVE AGENT.

ALLOW 24 HOURS FOR SILICONE TO CURE BEFORE USE.

CARE & MAINTENANCE
WE RECOMMEND THAT THE MARBLE TOPS ARE RE-SEALED APPROX. EVERY 6-12 MONTHS.
APPLICATION OF ANY SEALER SHOULD BE IN ACCORDANCE WITH THE MANUFACTURER'S INSTRUCTION.

CLEAN THE PRODUCT WITH WARM SOAPY WATER OR A VERY MILD DETERGENT.
DO NOT USE DETERGENTS OR ABRASIVE CLEANERS.
SMALL MARKS AND MINOR SCRATCHES CAN BE BUFFED OUT USING A FINE T-CUT COMPOUND.
DO NOT POUR BOILING WATER OR STAND VERY HOT OBJECTS ON THE SURFACE AS THIS CAN DAMAGE THE FINISH.