Sales Code: 315273 **Barcode:** 5056817744823 **Brand:** Bayswater **Description:** Bayswater Hartleigh Hunter Green Traditional Wall Hung Vanity Unit & 1 Tap Hole Modern Recessed Basin - 600mm



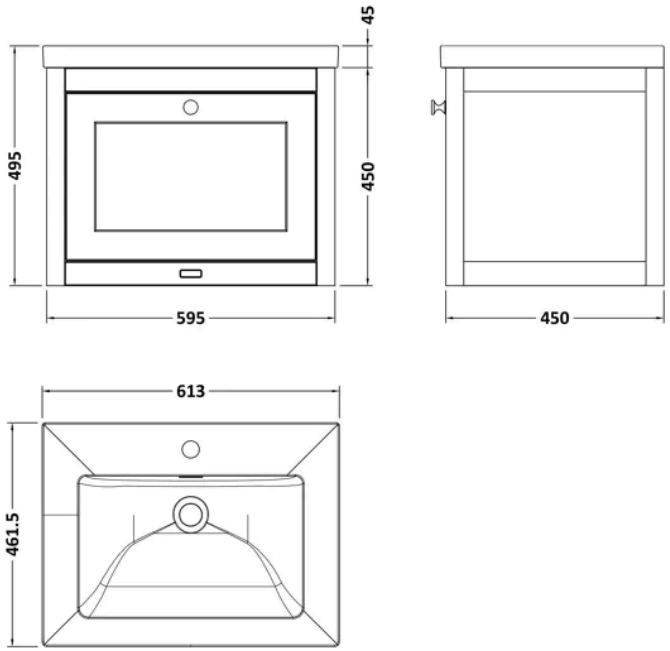

Product Dimensions

Product	495 x 613 x 462mm (H x W x D)
Packaged	960 x 1170 x 630mm (H x W x D)
Nett Weight	36.5 kg
Packaged Weight	36.5 kg

Product Details

Country of Origin	Ukraine
Product Material	Fireclay,Mfc Painted Matt
Colour/Finish	Hunter Green
Mount Type	Wall Hung
Style	Traditional
Handle Type	Knob
Construction Method	Cam & Wood Dowel
Construction Type	Rigid
Drawer Type	80mm High Metal S/C Inc Gallery
Fascia Finish	Mdf Painted Matt
Handles Included	Yes
Inner Bowl Depth	300 mm
Inner Bowl Height	135 mm
Inner Bowl Width	480 mm
Material Thickness	18 mm
No. Drawers	1
No. Of Tapholes	1
No. Shelves	1
Number Of Bowls	1
Number Of Shelves	1
Overflow Cover Included	Yes
Overflow Included	Yes
Tap Included	No
Waste Included	No
Waste Shroud	Yes
Guarantee	10 Years

© BAYSWATER

Sales Code: BAYC603 **Barcode:** 5056817727529 **Brand:** Bayswater **Description:** Bayswater 600mm 1 Tap Hole Modern Fireclay Basin



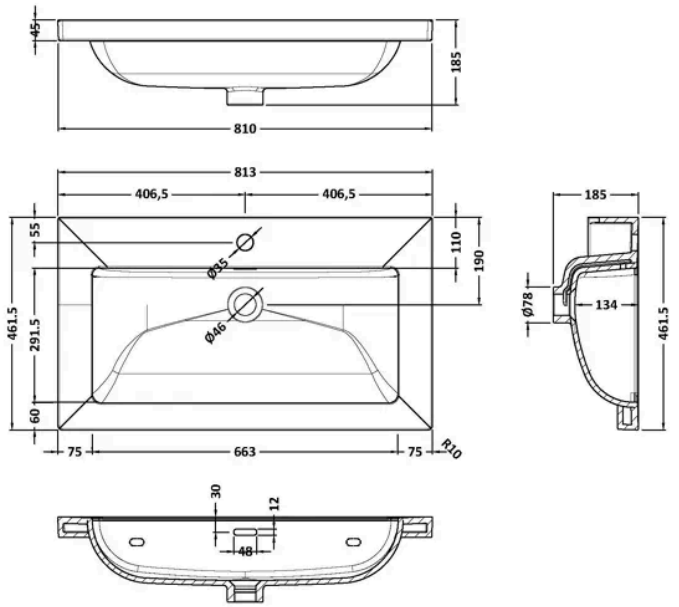

Product Dimensions

Product	185 x 613 x 292mm (H x W x D)
Packaged	490 x 650 x 220mm (H x W x D)
Nett Weight	17 kg
Packaged Weight	17 kg

Packaging Details

Label Size (mm)	100 x 50
Label Colour	White
Label Qty	2.0000

Product Details

Country of Origin	United Arab Emirates
Product Material	Fireclay
Colour/Finish	White
Style	Contemporary
Bottle Trap Included	No
Ce Certified	Yes
Inner Bowl Depth	300 mm
Inner Bowl Height	135 mm
Inner Bowl Width	463 mm
No. Of Tapholes	1
Number Of Bowls	1
Overflow Cover Included	No
Overflow Included	No
Tap Included	No
Waste Included	No

© BAYSWATER

Sales Code: BAYF821H **Barcode:** 5056817727420 **Brand:** Bayswater **Description:** Bayswater Hartleigh 500mm Hunter Green 1 Drawer Wall Hung Vanity Unit



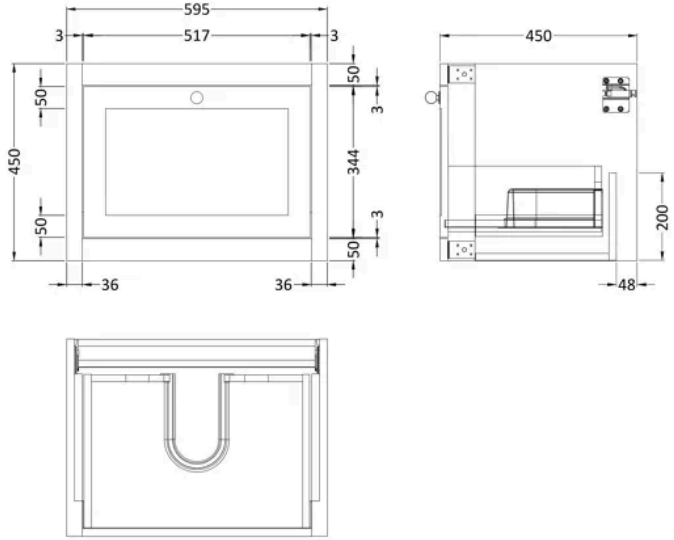

Product Dimensions

Product	450 x 600 x 450mm (H x W x D)
Packaged	490 x 625 x 490mm (H x W x D)
Nett Weight	19 kg
Packaged Weight	19.5 kg

Product Details

Country of Origin	Ukraine
Product Material	Mfc Painted Matt
Colour/Finish	Hunter Green
Mount Type	Wall Hung
Style	Traditional
Handle Type	Knob
Construction Method	Cam & Wood Dowel
Construction Type	Rigid
Drawer Type	80mm High Metal S/C Inc Gallery
Fascia Finish	Mdf Painted Matt
Handles Included	Yes
Material Thickness	18 mm
No. Drawers	1
Waste Shroud	Yes

© BAYSWATER