STANDARD BATH PANEL FITTING INSTRUCTION

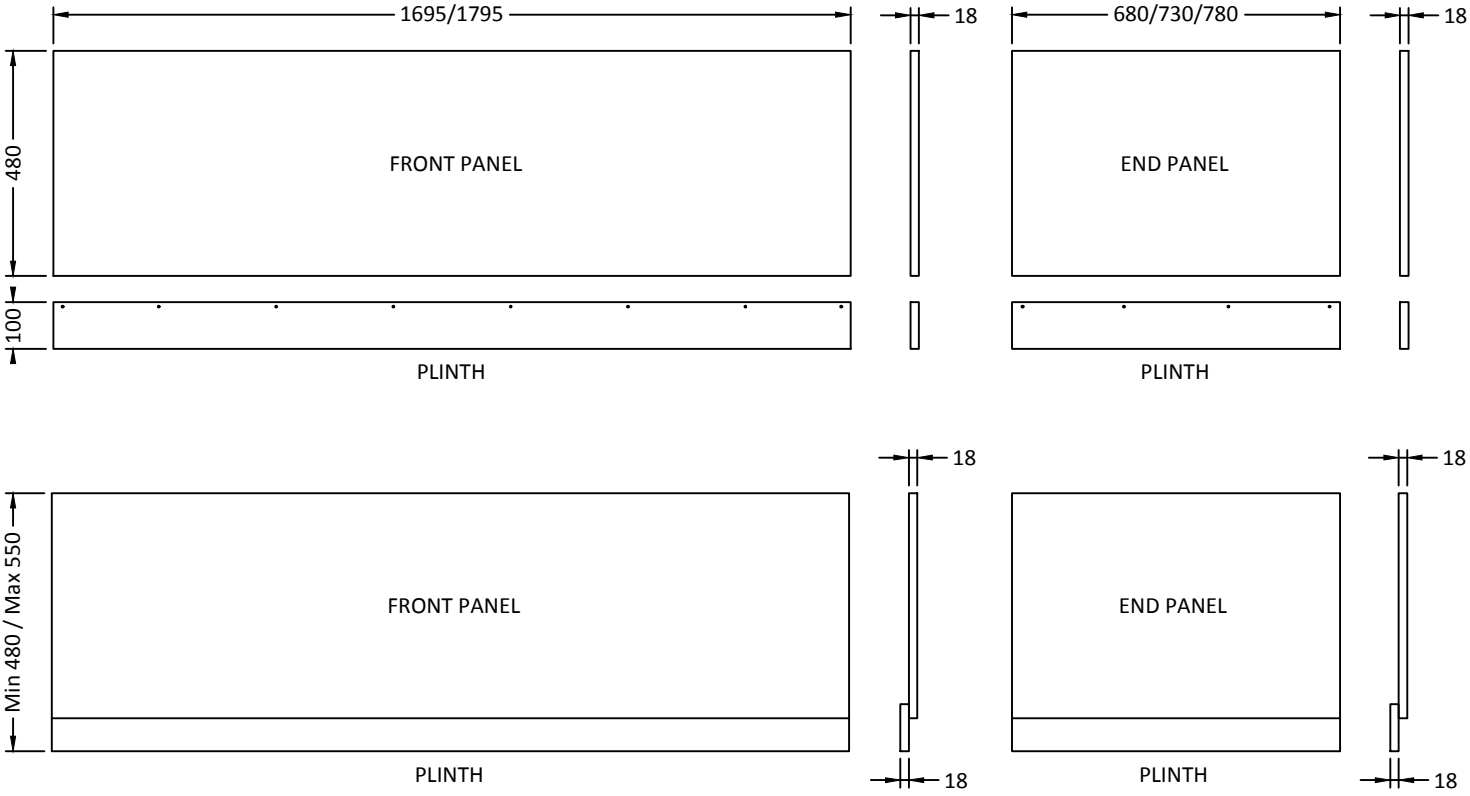

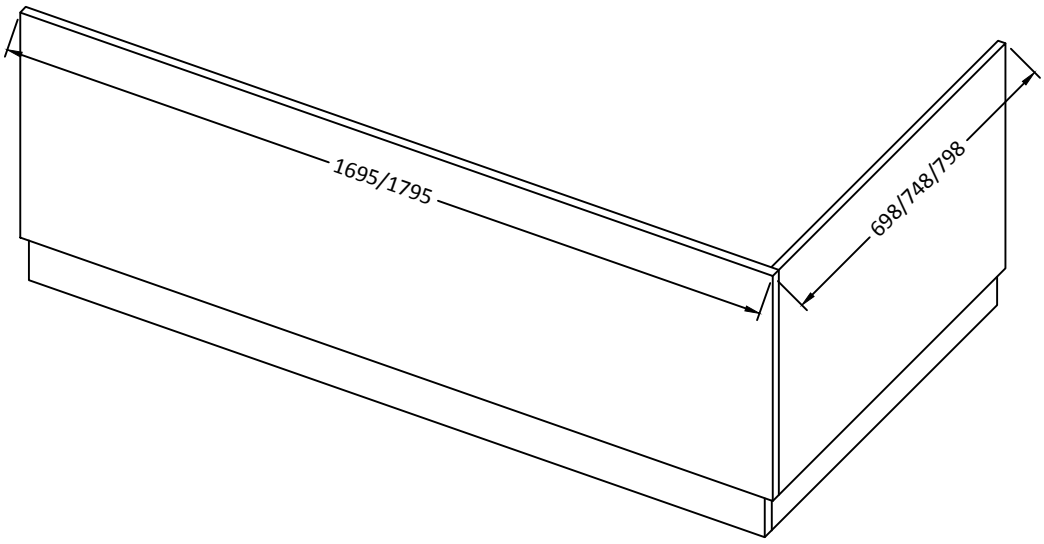

1. MEASURE FROM THE UNDERSIDE OF THE BATH RIM TO THE FLOOR TO ESTABLISH THE HEIGHT OF THE BATH PANEL REQUIRED.

2. DRILL EQUALLY SPACED HOLES ALONG THE PLINTH AND SCREW TO THE BOTTOM EDGE OF THE MAIN PANEL AT THE DESIRED HEIGHT.

3. IT IS ADVISABLE THAT YOU BUILD A FRAME OR FIT BATTENS ALONG THE FLOOR AND DOWN THE WALL SIDES TO SUPPORT THE PANEL.

4. WHEN AN END PANEL IS USED, IT MAY BE NECESSARY TO TRIM THE PANEL AND PLINTH.
ANY TRIMMING SHOULD BE DONE AT THE WALL END TO ENSURE THAT THE FINISHED EDGE IS AT THE VISIBLE CORNER.

5. ANY CUT OR TRIMMED EDGES MUST BE SEALED AGAINST WATER INGRESS. IT IS ALSO ADVISABLE TO SEAL ALL THE OUTER EDGES OF THE PANELS AND IN PARTICULAR THE UNDERSIDE OF THE BATH LIP WHERE THE PANEL MEETS.