Sales Code: 345993 **Barcode:** 5056883701577 **Brand:** nuie **Description:** Nuie Chrome Wet Room SCREEN, Shower Tray & Waste - 1200 x 800mm



Technical Drawing Not Available

Product Dimensions

Product	1850 x 1200 x 800mm (H x W x D)
Packaged	1850 x 800 x 1200mm (H x W x D)
Nett Weight	94.57 kg
Packaged Weight	94.57 kg

Packaging Details

Box Qty	8

Product Details

Country of Origin	China
Product Material	Abs Capped Stone Resin,Aluminium,Glass
Colour/Finish	Chrome
Style	Contemporary
Easy Clean	No
Glass Thickness	8 mm
Raised Edge	Yes
Slip Resistant	No
Waste Included	Yes
Guarantee	Lifetime

© NUIE

Sales Code: FIX023 **Barcode:** 5056211800002 **Brand:** nuie **Description:** Chrome Wetroom Screen Support Arm



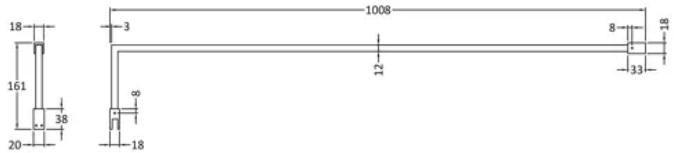

Product Dimensions

Product	150 x 15 x 1000mm (H x W x D)
Packaged	35 x 160 x 1020mm (H x W x D)
Nett Weight	0.67 kg
Packaged Weight	0.7 kg

Packaging Details

Box Qty	1

Product Details

Country of Origin	China
Product Material	Stainless Steel
Colour/Finish	Chrome
Style	Contemporary

© NUIE

Sales Code: NTP023 **Barcode:** 5055369006311 **Brand:** nuie **Description:** 1200 x 800mm White Slimline Rectangular Shower Tray

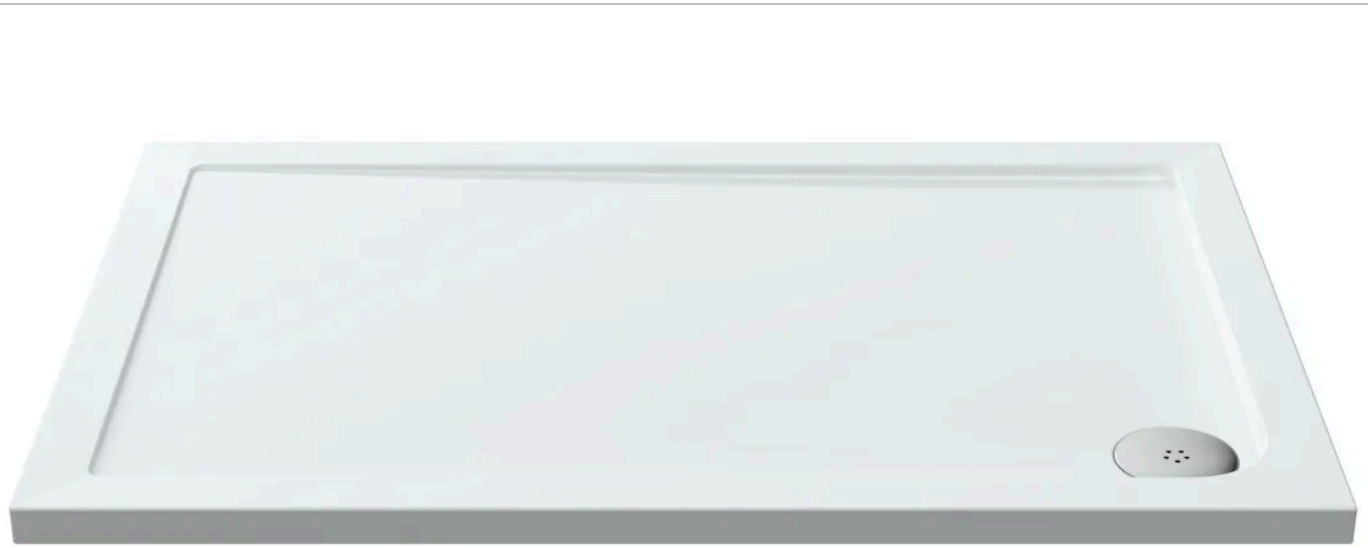

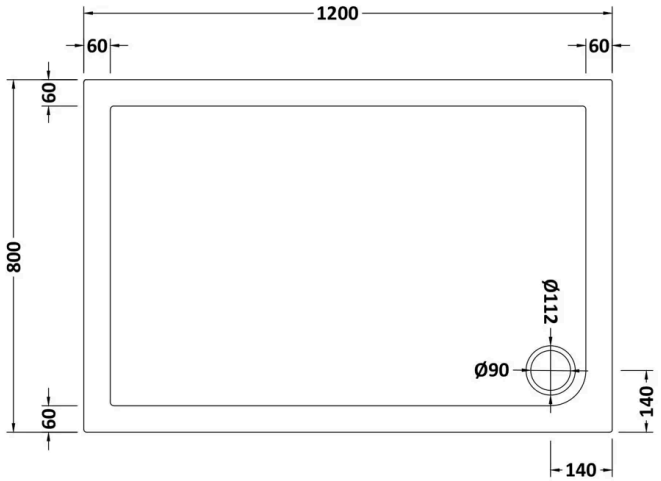

Product Dimensions

Product	40 x 800 x 1200mm (H x W x L)
Packaged	80 x 840 x 1240mm (H x W x D)
Nett Weight	29.8 kg
Packaged Weight	30.1 kg

Packaging Details

Box Qty	1

Product Details

Country of Origin	United Kingdom
Product Material	Acrylic Capped Abs Caco3 And Pu
Colour/Finish	White
Style	Contemporary
Ce Certified	Yes
Leg Set Included	No
Raised Edge	Yes
Slip Resistant	No
Waste Included	No
Waste Size Required	90mm

© NUIE

Sales Code: STW001 **Barcode:** 5055369011629 **Brand:** nuie **Description:** Chrome 90mm Round Fast Flow Shower Waste



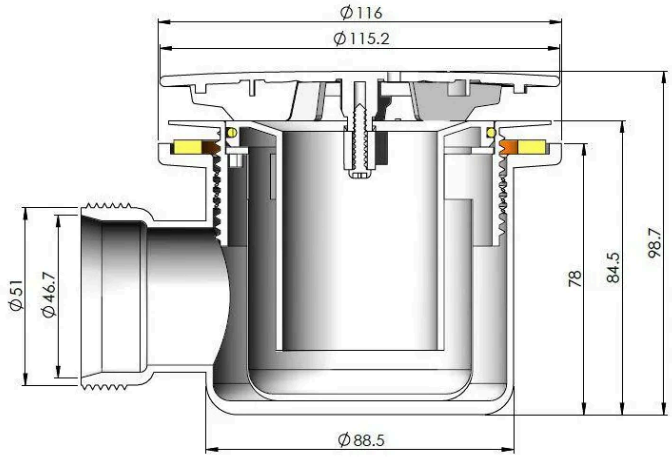

Product Dimensions

Product	99 x 116 x 116mm (H x W x D)
Packaged	100 x 140 x 170mm (H x W x D)
Nett Weight	0.31 kg
Packaged Weight	0.37 kg

Packaging Details

Box Qty	1

Product Details

Country of Origin	United Kingdom
Product Material	Polypropylene
Waste Type	Fast Flow
Colour/Finish	Chrome
Style	Contemporary
Waste Shape	Round

© NUIE

Sales Code: WRSC070G **Barcode:** 5056678418420 **Brand:** nuie **Description:** Glass Only 700 x 1850 x 8mm

Product Image Not Available

Technical Drawing Not Available

Product Dimensions

Packaged	65 x 750 x 1920mm (H x W x D)
Nett Weight	28 kg
Packaged Weight	28.5 kg

Product Details

Colour/Finish	Clear

© NUIE

Sales Code: WRSC080G **Barcode:** 5056678418444 **Brand:** nuie **Description:** Glass Only 800 x 1850 x 8mm

Product Image Not Available

Technical Drawing Not Available

Product Dimensions

Packaged	65 x 850 x 1920mm (H x W x D)
Nett Weight	32.5 kg
Packaged Weight	33 kg

Packaging Details

Box Qty	1

Product Details

Colour/Finish	Clear

© NUIE

Sales Code: WRSF028 **Barcode:** 5056678409909 **Brand:** nuie **Description:** Chrome 1850mm Wetroom Wall Channel

Product Image Not Available

Technical Drawing Not Available

Product Dimensions

Product	60 x 185 x 1860mm (H x W x D)
Packaged	400 x 50 x 1860mm (H x W x D)
Nett Weight	0.6 kg
Packaged Weight	0.6 kg

Product Details

Product Material	Aluminium
Colour/Finish	Chrome

© NUIE