SIEMENS

iQ500, Built-in fridge-freezer with freezer at bottom, 193.5 x 70.8 cm, soft close flat hinge KB96NADD0G

Optional accessories

KSZGGM00	Butter box

Built-in fridge freezer with 45 percent extra space and hyperFresh <0°C>: ideal storage conditions for all your food and XXL capacity to shop in bulk.

✓ bottleRack – Store your bottles safely and within easy reach.
✓ safetyGlass shelves – Extra strong and easy to clean.

Features

Technical Data

Energy Efficiency Class[1]: ..... D
Average annual energy consumption in kilowatt hour per year (kWh/a): ..... 204 kWh/annum
Sum of volume of frozen compartments: ..... 98 l
Sum of volume of chill compartments: ..... 284 l
Airborne acoustical noise emissions : ..... 33 dB(A) re 1pW
Airborne acoustical noise emission class: ..... B
Built-in / Free-standing: ..... Built-in
Door panel options: ..... Not possible
Height: ..... 1935 mm
Width of the appliance: ..... 708 mm
Dimensions: ..... 548 mm
Required niche size for installation (HxWxD): .... 1940x710x560 mm
Weight: ..... 73.2 kg
EAN code: 4242003933343
Fuse protection: ..... 10 A
Door opening: ..... Right reversible
Nominal power: ..... 220-240 V
Frequency: ..... 50 Hz
Length electrical supply cord: ..... 230 cm
Number of compressors: 1
Number of independent cooling systems: 2
Interior ventilator: ..... Yes
Reversible Door Hinge: ..... Yes
Number of Adjustable Shelves in fridge compartment: 3
Shelves for Bottles: ..... Yes
Frost free system: ..... Freezer
Installation type: ..... Fully integrated

4 242003 933343

[1] Scale of Energy Efficiency Classes from A to G

SIEMENS

iQ500, Built-in fridge-freezer with freezer at bottom, 193.5 x 70.8 cm, soft close flat hinge KB96NADD0G

Features

Design features
- noFrost freezer, Built-in fridge freezer
- Right hinged door, door reversible
- Fixed hinge, softClosing door system - dampens door movement, for smooth and effortless closure
- Height adjustable front feet
- LED fridge light with Soft Start in fridge section
- Electronic control (2 LED chains)

Functions
- Automatic defrost in fridge section
- NO_FROST_NEU_BL, never have to defrost ever again
- Twin evaporators allows independent temperature control and ensures there is no transference of humidity between the fridge and freezer cavity.
- Super Cooling: automatic deactivation
- acoustic alarm, Optical and acoustical door open warning system, acoustic for Fridge and Freeze
- Home Connect: iService Remote, Remote Monitoring and Control with Wi-Fi connectivity

Food freshness system
- 1 hyperFresh box with integrated humidity control

Key features - Fridge section
- 5 safety glass shelves of which 3 are height adjustable
- Bottle rack
- Door shelves in fridge door: 1 large and 2 small.

Key features - Freezer section
- 3 freezer drawers

Additional features
- 2 x ice cube tray

Performance and Consumption
- Climate Class: SN-T
- Total Volume : 381 l
- Net Fridge Volume : 284 l
- Net Freezer Volume : 98 l
- Annual Energy Consumption: 204 kWh/a
- Noise Level : 33 dB , EU19_Noise emission class_D: B
- Temperature rise time : EU19_Temperature rise time_D: 13 H
- Freezing capacity 24h : 10 kg
- 220 - 240 V
- EU19_EEK_D: D
- EU19_Fast freezer facility_D
- Based on the results of the standard 24-hour test. Actual consumption depends on usage/position of the appliance.

Dimension and installation
- Dimensions: 193.5 cm H x 70.8 cm W x 54.8 cm D
- Niche Dimensions: 194 cm H x 71 cm W x 56 cm D
- Length of power cord:230 cm

Country Specific Options

SIEMENS

iQ500, Built-in fridge-freezer with freezer at bottom, 193.5 x 70.8 cm, soft close flat hinge KB96NADD0G

Dimensioned drawings

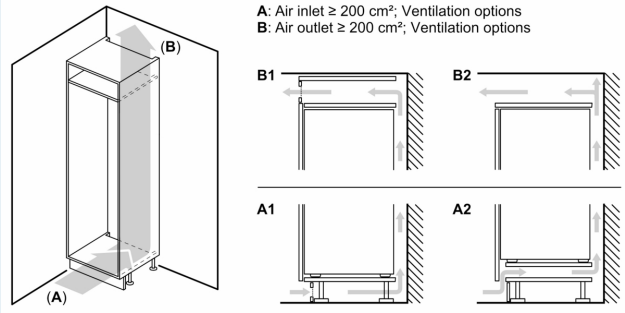

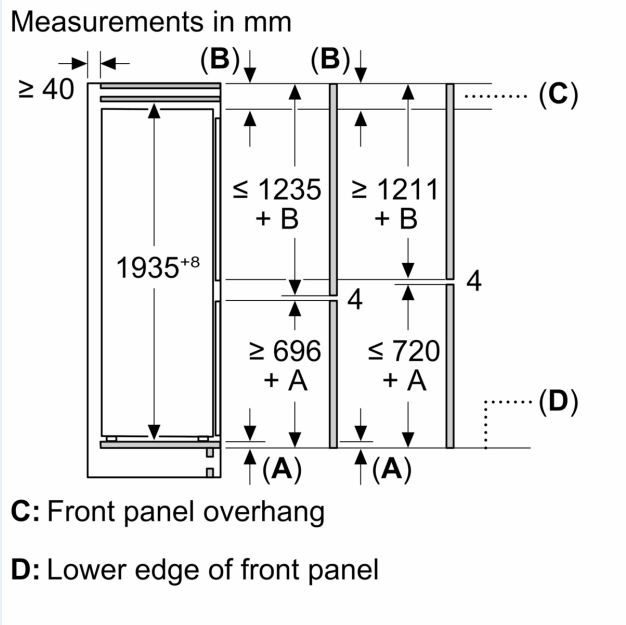

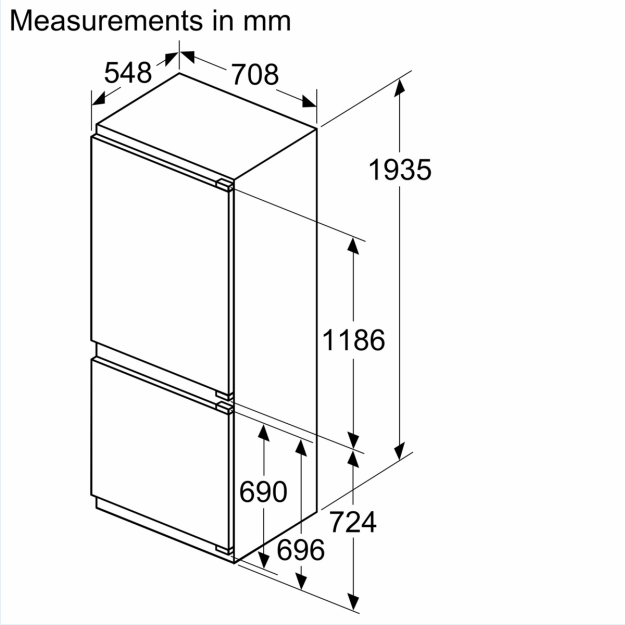

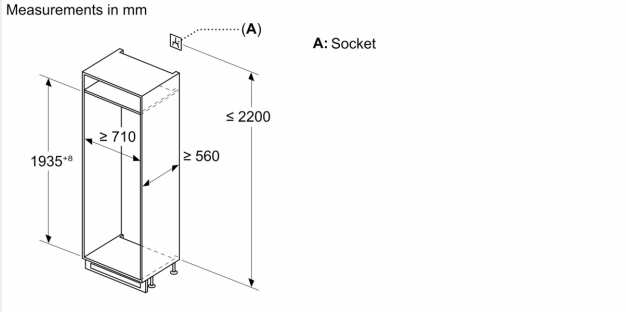

SIEMENS

Dimensioned drawings

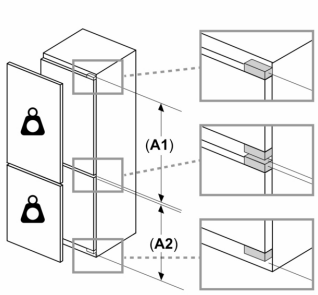

Maximal permissible weight of the unit fronts

Fitted unit fronts that exceed the permissible weight may cause damage and result in functional impairment of the hinges

Weight

A1	20 kg
A2	19 kg

measurements in mm
Recommended gap dimensions for flat hinges

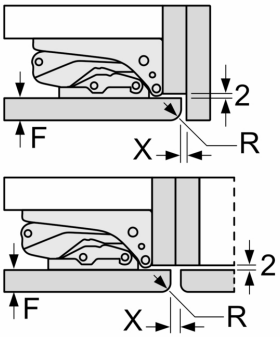

F	R	X
16-19	0-3	2.5
20	0-1	3
	2-3	2.5
21	0-1	3
	2-3	2.5
22	0	4
	1	3.5
	2-3	3

The gap dimensions recommended in the table must be adhered to in order to ensure that appliance doors do not collide with anything when they are opened, and to avoid causing damage to kitchen units.