WC880121 | PRODUCT DATA SHEET

ARUN MATT BLACK PIVOTING CABINET





SPECIFICATION

Materials	• Carcass: Mild Steel • Outer Mirror: Mirrored Glass • Inner Mirror: Reflective Polished Stainless Steel • Mirror Backing Panel: Reflective Polished Stainless Steel • Shelves & Shelf Guards: Mild Steel • Bracket: Stainless Steel
Colours	• Carcass: Matt Black • Shelving: Matt Black • Inner Mirror: Reflective Polished Stainless Steel • Outer Mirror: Mirrored Glass • Bracket: Brushed Stainless Steel
Dimensions	• 642mm(H) x 350mm(W) x 115mm(D)
Weight	• 8Kg
Features	• Fully Assembled – Install straight away with no build needed • Two Fixed Shelves – Keeps essentials neatly organised • Pivoting Design – Saves space and improves daily use • Matt Black Frame – Adds a sleek, modern bathroom look • Guard Rails – Prevent items from slipping or falling • Stainless Steel Backing – Enhances brightness and durability • Right hand door opening only

Tel: +44 (0) 1264 365881
Fax: +44 (0) 1264 356437
Email: info@croydex.co.uk
Web: www.croydex.com

Printed material, designs and packaging are protected by copyright and design right.

LINE DRAWING

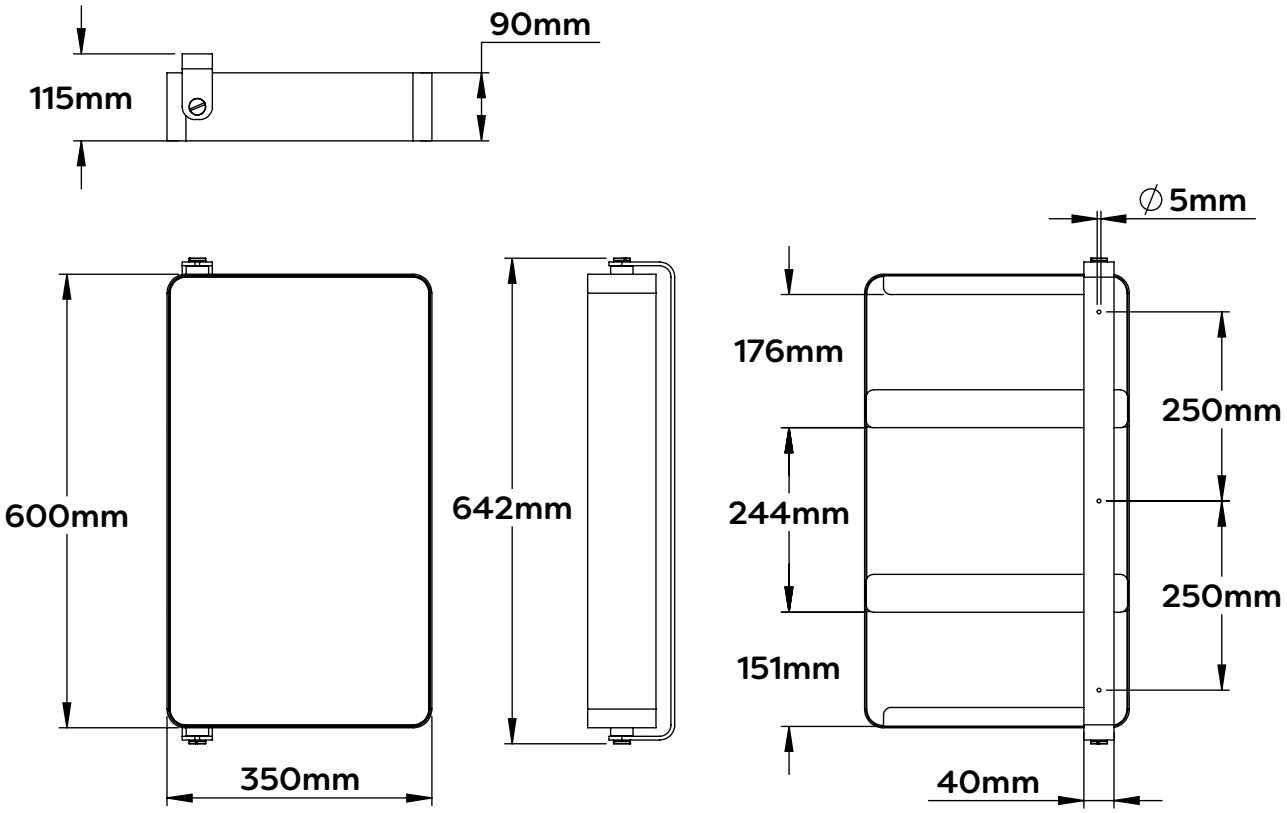

ALL DIMENSIONS ARE NOMINAL

SPECIFICATION

Standards	• All Plastic used in this product must conform to the prevailing EU “REACH” regulations. • Minimum grade 9 when assessed using BS EN ISO 10289 after 48 hours Neutral Salt Spray (NSS) testing in accordance with BS EN ISO 9227.
Applications	• Domestic • Residential • Hotels
Product Care	• Clean surfaces with a damp cloth and wipe dry using a soft cloth • Do not use chemical or abrasive cleaners as these may damage the surface finish
Guarantee	• Consumer Statutory Rights Apply