7.

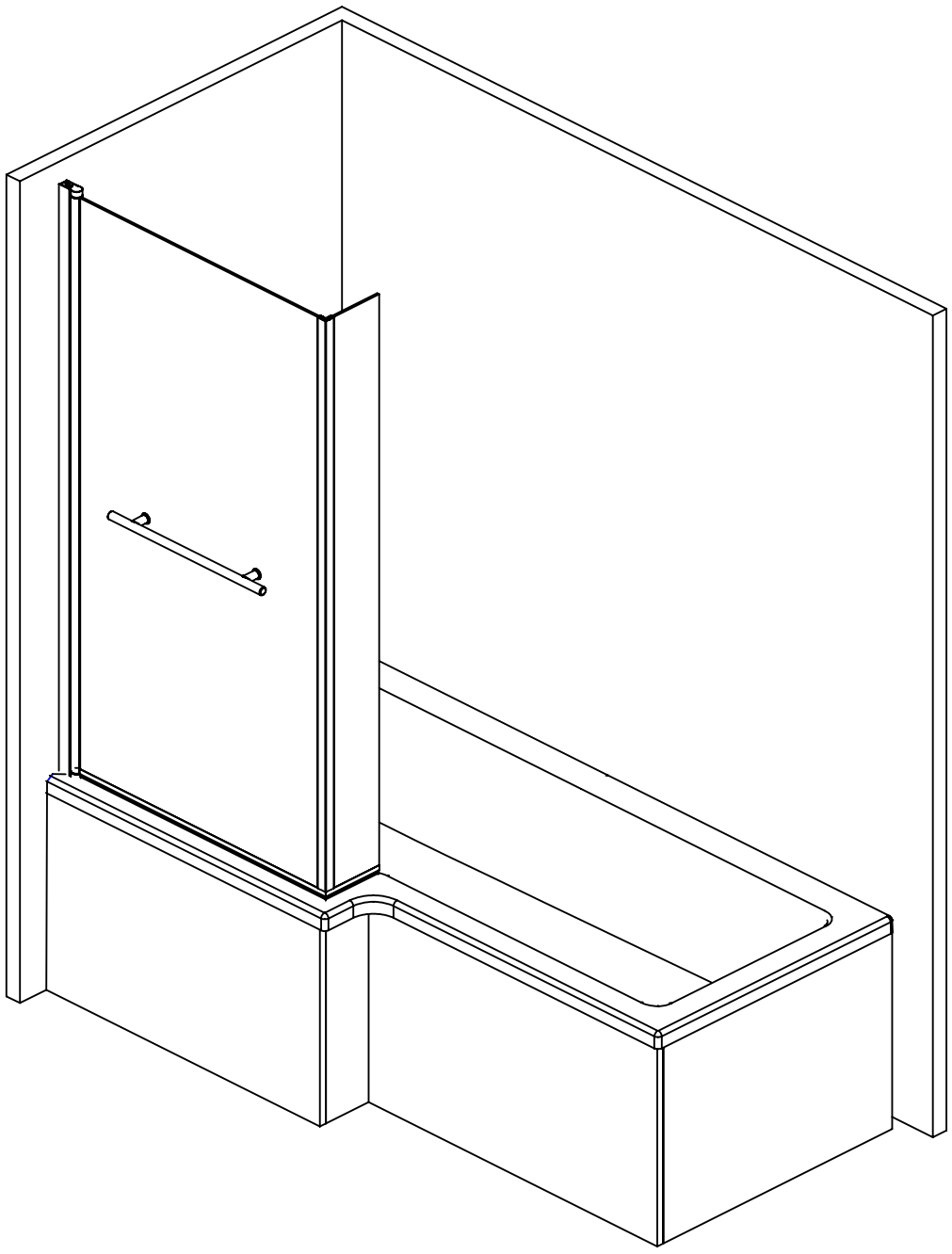

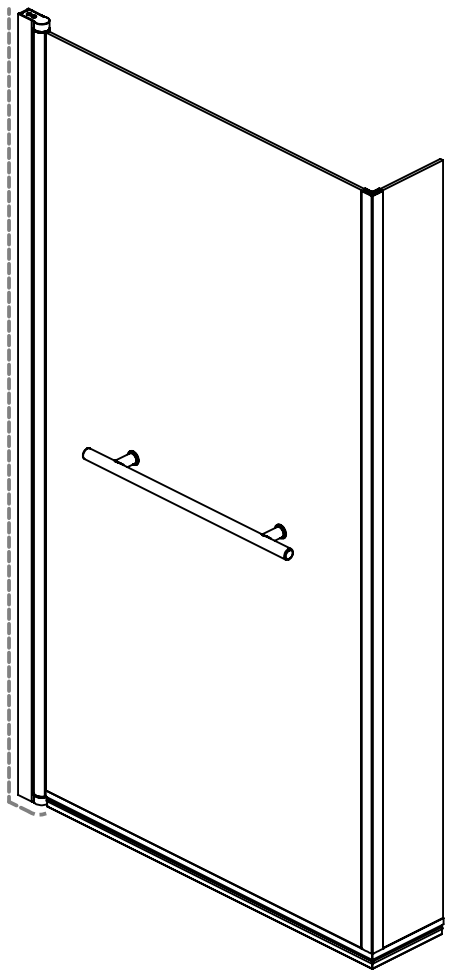

EXTERNALLY SILICONE SEAL THE WALL PROFILE WHERE IT MEETS THE WALL AND ALONG THE BOTTOM OF THE PROFILE AND MOULDING UP TO THE LARGE BOTTOM SEAL. ILLUSTRATED BELOW. ENSURE THAT YOU DON'T SILICONE THE LARGE BOTTOM SEAL.

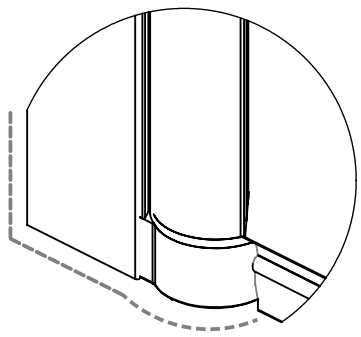

DO NOT SILICONE ON THE INSIDE OF THE BATH SCREEN.

ALLOW THE SILICONE AT LEAST 24 HOURS TO FULLY CURE.

AFTERCARE: ENSURE YOU CLEAN YOUR PRODUCT USING A MILD DETERGENT DILUTED IN WATER, REMOVING AND RESIDUE WITH A SOFT DAMP CLOTH.
MAINTENANCE: ENSURE MOVING PARTS ARE FREE FROM ANY DEBRIS OR SOAP BUILD UP.

HINGED BATH SCREEN INSTRUCTION (OPTIONAL TOWEL RAIL)

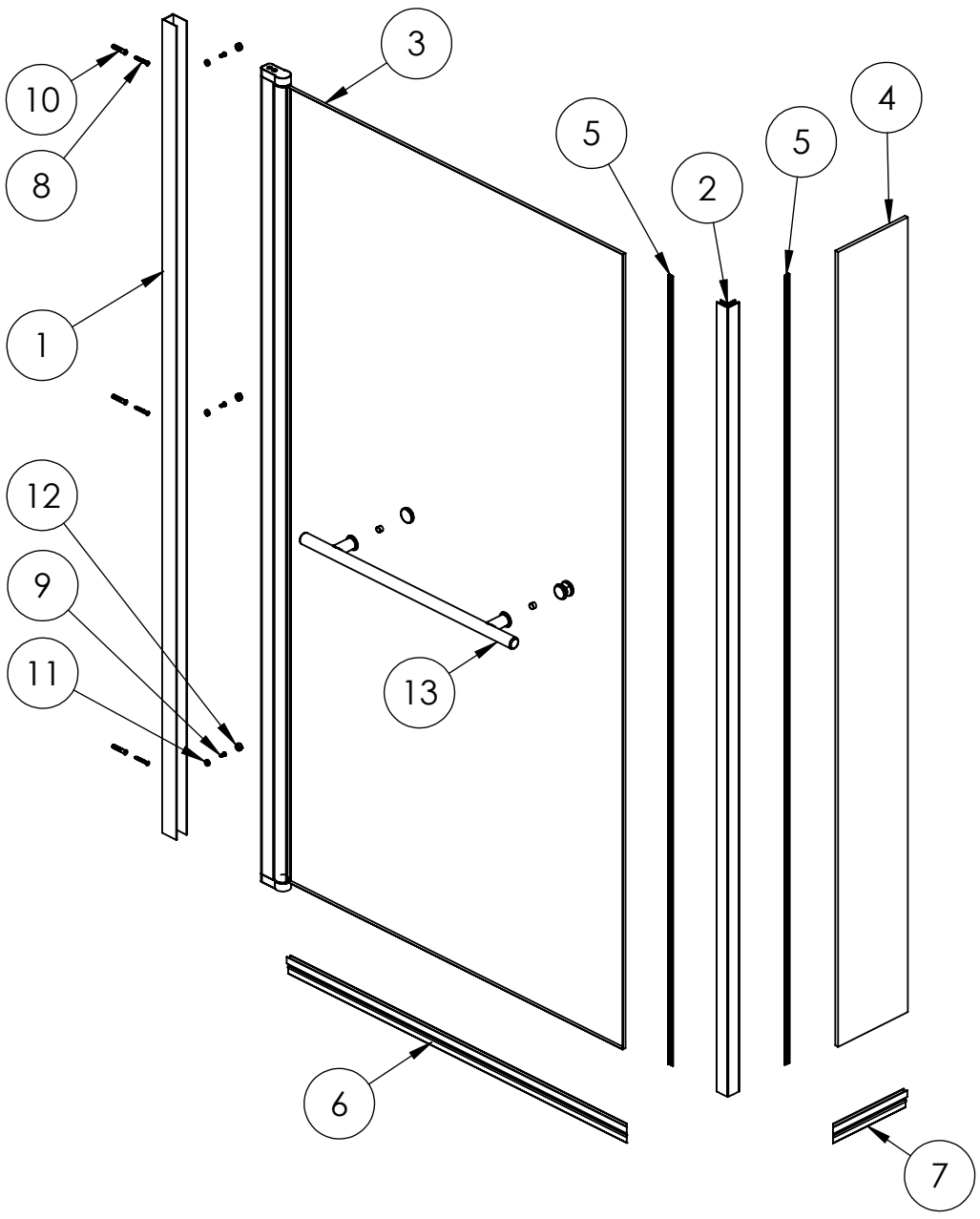

UNPACK THE BOX AND ENSURE ALL COMPONENTS ARE PRESENT .

NO REFUNDS OR REFITTING COST WILL BE GIVEN IF INCOMPLETE OR DAMAGED GOODS ARE FITTED.

THE TOUGHENED SAFETY GLASS SHOULD BE HANDLED WITH CARE AS IMPACTS WILL DAMAGE THE GLASS OR BATH SCREEN.

FIT THE BATH AS PER THE MANUFACTURERS INSTRUCTIONS.

NOTE: IF THE BATH ISN'T TRUE AND LEVEL, IT MUST BE RECTIFIED BEFORE SILICONING THE WALL PROFILE. ALLOW THE SILICONE TO DRY BEFORE FITTING THE BATH SCREEN.

TOOLS REQUIRED

POWER DRILL - 3mm DRILL BIT - 6mm MASONARY DRILL BIT - CROSS HEAD SCREW DRIVER - TAPE MEASURE - PENCIL - SILICONE GUN WITH SANITARY GRADE SEALANT - SPIRIT LEVEL - RUBBER HEAD MALLET.

ITEM	DESCRIPTION	Notes	QTY
1	WALL PROFILE		1
2	CORNER POST		1
3	LARGE GLASS PANEL		1
4	SMALL GLASS PANEL		1
5	WEDGE SEAL		2
6	LARGE BOTTOM SEAL		1
7	SMALL BOTTOM SEAL		1
8	SCREW DIA 3.9mm x 30mm PAN HEAD	FOR FIXING TO WALL	3
9	SCREW DIA 3.9mm x 10mm PAN HEAD		3
10	RAWLPLUG		3
11	SCREW CUP	FOR EXTERNAL SCREWS	3
12	SCREW CHROME CAP	FOR EXTERNAL SCREWS	3
13	TOWEL RAIL SUB ASSEMBLY	OPTIONAL	1

1.

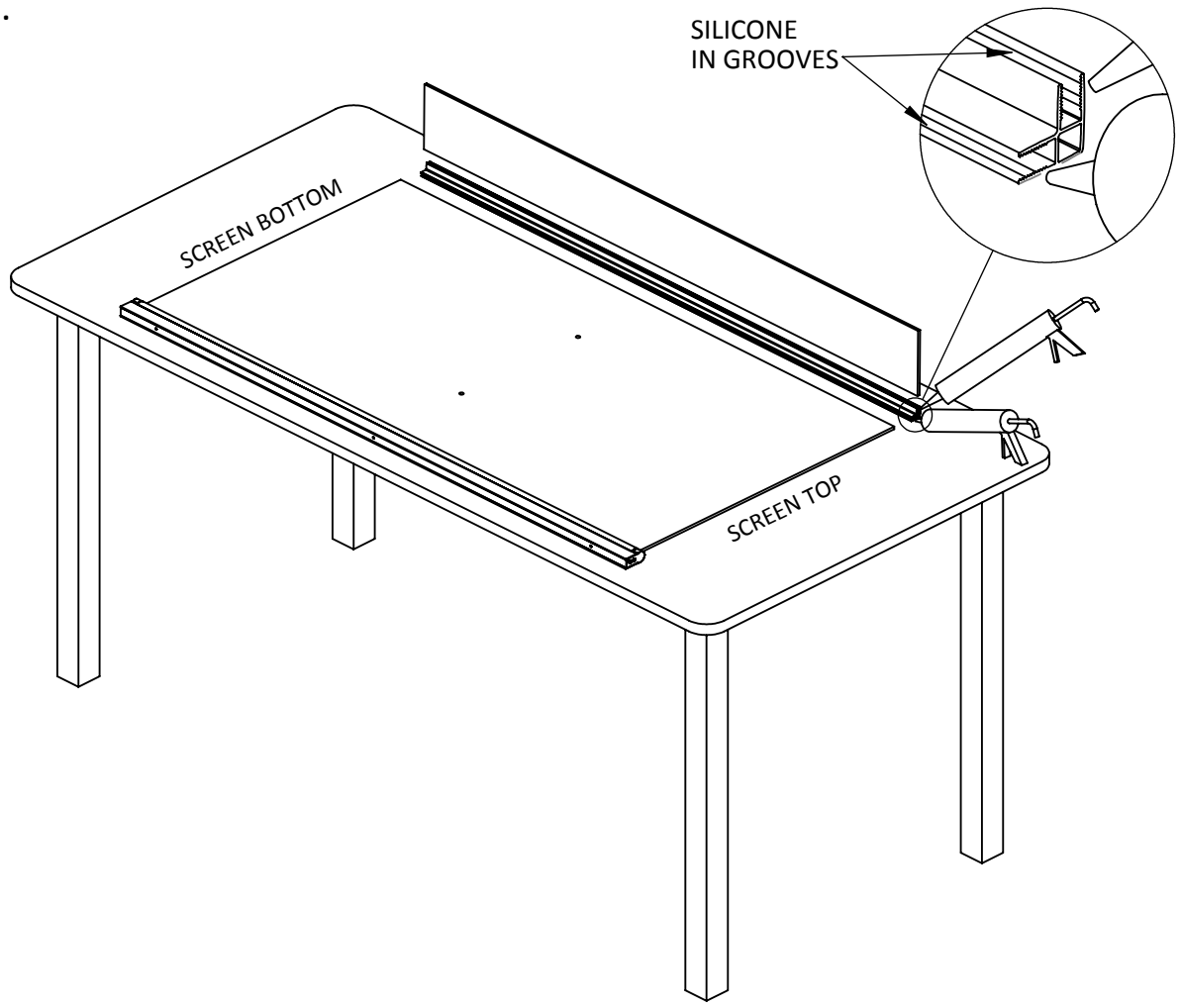

LAY THE LARGE GLASS PANEL (3) ON A CLEAN FLAT SURFACE WITH THE CORNER POST (2) FACING UPWARDS.

BEFORE FITTING THE GLASS PANELS TOGETHER, DETERMINE WHICH HAND YOU WILL REQUIRE (LEFT HAND/RIGHT HANDED FITTING) THEN DETERMINE WHICH WILL BE THE TOP AND BOTTOM OF YOUR SCREEN.

CLEAN BOTH GLASS PANELS WHERE THEY WILL FIT INTO THE CORNER POST SO THE SILICONE WILL ADHERE.

IN BOTH CORNER POST GROOVES APPLY AN ADEQUATE BEAD OF SILICONE ALONG THE LENGTH OF THE CHANNELS (4). THIS SILICONE WILL BOND THE GLASS TO THE CORNER POST.

IMPORTANT:
WHEN INSERTING THE GLASS PANELS INTO THE CORNER PROFILE ENSURE THAT BOTH GLASS PANELS AND THE TOP OF THE CORNER POST ARE LEVEL.

2.

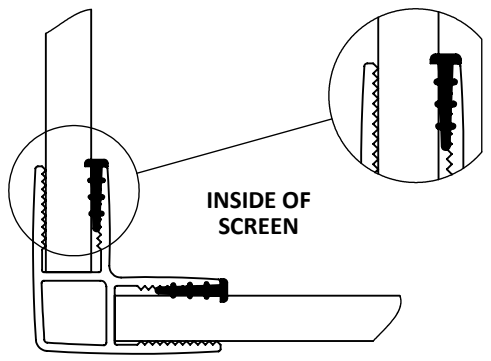

NOW INSERT THE WEDGE SEALS (5) INTO THE INSIDE FACES OF THE CORNER POST AS SHOWN ABOVE. PUSH THE SEAL DOWN THE LENGTH OF THE CORNER POST. A WOODEN BLOCK CAN BE USED TO AID THE FITTING.

TRIM OFF ANY SURPLUS SEAL AT EITHER END SO ITS LEVEL WITH THE PROFILE.

WIPE OFF ANY EXCESS SILICONE AND ALLOW TO DRY.

3.

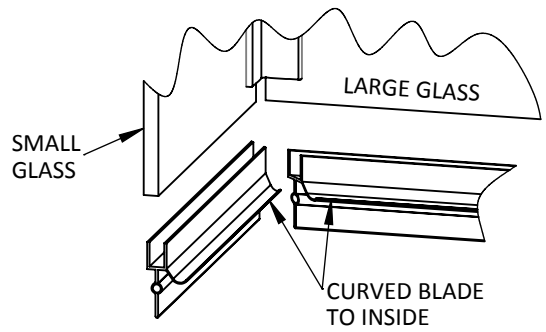

NEXT YOU WILL NEED TO FIT THE LARGE AND SMALL BOTTOM SEALS TO THE BOTTOM OF THE GLASS PANELS. BUT FIRST MITRE THE LARGE AND SMALL BOTTOM SEALS AT 45° SO THAT THEY FIT TOGETHER BELOW THE CORNER POST. THE LONG SEAL MUST ALSO BUTT UPTO THE BOTTOM MOULDING ON THE HINGE BARREL. THE SHORT SEAL WILL FINISH LEVEL WITH THE END OF THE GLASS.

ENSURE THE CURVED BLADE IS TO THE INSIDE OF THE SCREEN.

4.

SLIDE THE WALL PROFILE (1) ONTO THE SCREEN. SIT THE SCREEN ONTO THE BATH AND ADJUST SO THE SMALL GLASS PANEL (4) BUTTS UPTO THE INSIDE RADIUS OF THE BATH. MARK THE POSITION OF THE WALL PROFILE ON THE WALL WITH A PENCIL.

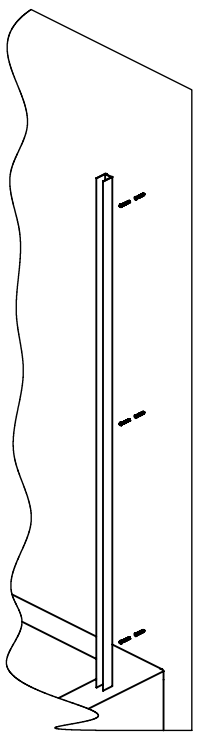

MOVE THE SCREEN ASIDE AND REMOVE THE WALL PROFILE. REALIGN THE WALL PROFILE WITH THE PENCIL MARKS, ENSURING VERTICAL WITH A SPIRIT LEVEL. MARK THROUGH THE WALL PROFILE FIXING HOLES. USE A MASONARY DRILL BIT TO DRILL THE HOLES FOR WALL PLUGS (10). INSERT THE WALL PLUGS SO THAT THEY FIT FLUSH WITH THE WALL'S SURFACE. NOW FIX THE WALL PROFILE TO THE WALL USING SCREWS PROVIDED (8).

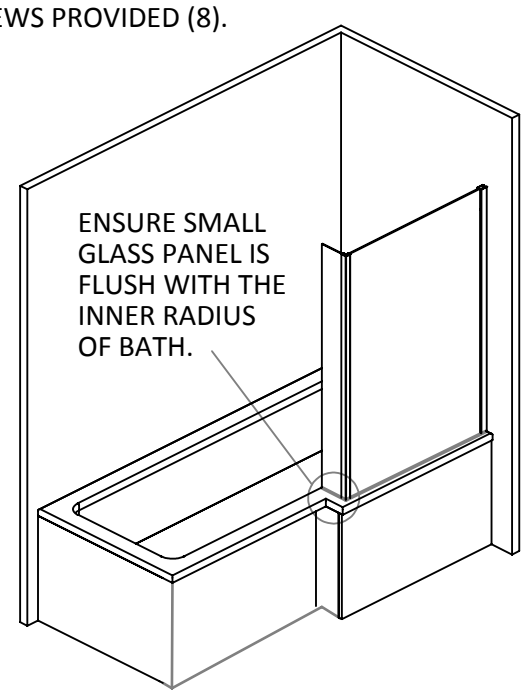

5.

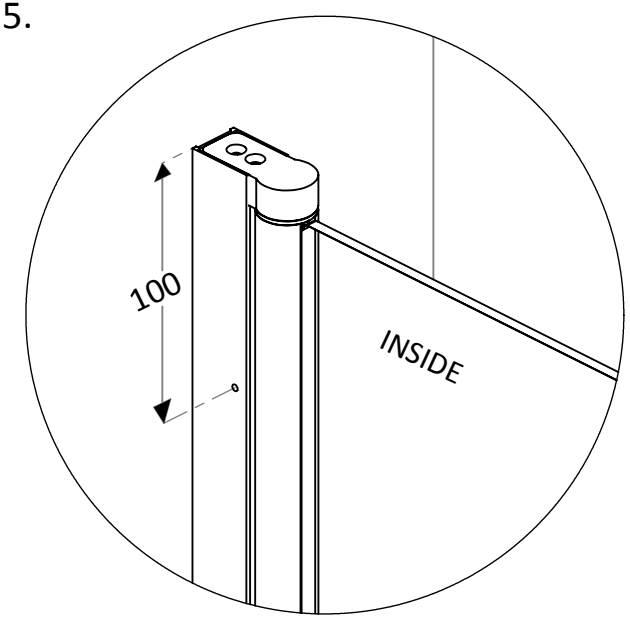

RE-INSERT THE SCREEN INTO THE WALL PROFILE. ADJUST THE POSITION OF THE SCREEN UNTIL IT IS PARALLEL WITH THE BATH TOP FACE AND UNTIL YOU'RE HAPPY WITH THE POSITIONING.

FROM THE INSIDE OF THE BATH SCREEN MAKE A PENCIL MARK ON THE WALL PROFILE APPROXIMATELY 100mm FROM THE TOP AND BOTTOM.

NOTE: WHEN MARKING THE HOLE POSITION ENSURE THAT THE 3mm HOLE DRILLED WILL GO THROUGH BOTH THE WALL AND SCREEN PROFILE, WITH AT LEAST 3mm OF THE PROFILE'S MATERIAL AROUND THE HOLE.

DO NOT DRILL THROUGH THE FRONT FACE OF THE WALL PROFILE.

NOW FIX THE SCREEN USING SCREWS (9) AND CUPS & COVERS (11 & 12) PROVIDED.

6. **OPTIONAL TOWEL RAIL FITTING**

ONLY FOR PRODUCTS THAT INCLUDE THE OPTIONAL TOWEL RAIL.

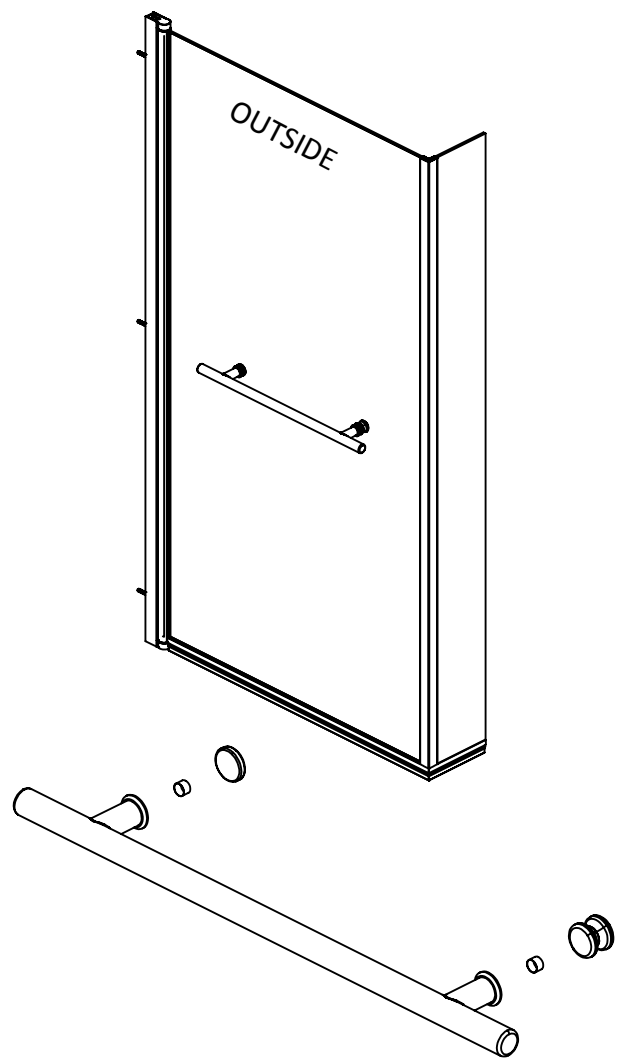

FIT THE TOWEL RAIL TO THE SCREEN ONCE THE SCREEN HAS BEEN FITTED TO THE WALL.

UNDER NO CIRCUMSTANCES MUST THE TOWEL RAIL BE USED AS AN AID FOR GETTING OUT OF THE BATH