BATH SCREEN INSTALLATION

THIS INSTRUCTION COVERS OTHER MODELS, PLEASE READ **ALL** PAGES
WE RECOMMEND THAT THE INSTALLATION OF THIS PRODUCT IS CARRIED OUT BY A COMPETENT PROFESSIONAL.

UNPACK THE BOX AND ENSURE ALL COMPONENTS ARE PRESENT. NO REFUNDS OR REFITTING COST WILL BE GIVEN IF INCOMPLETE OR DAMAGED GOODS HAVE BEEN FITTED. THE TOUGHENED SAFETY GLASS SHOULD BE HANDLED WITH CARE AS IMPACTS CAN DAMAGE THE GLASS AND CAUSE IT TO FAIL AT A LATER DATE.

TOOLS REQUIRED
POWER DRILL - PENCIL - 5mm MASONRY DRILL BIT - 3mm HSS DRILL BIT -
CROSS HEAD SCREWDRIVER - SANITARY GRADE SILICONE SEALANT - SPIRIT LEVEL.

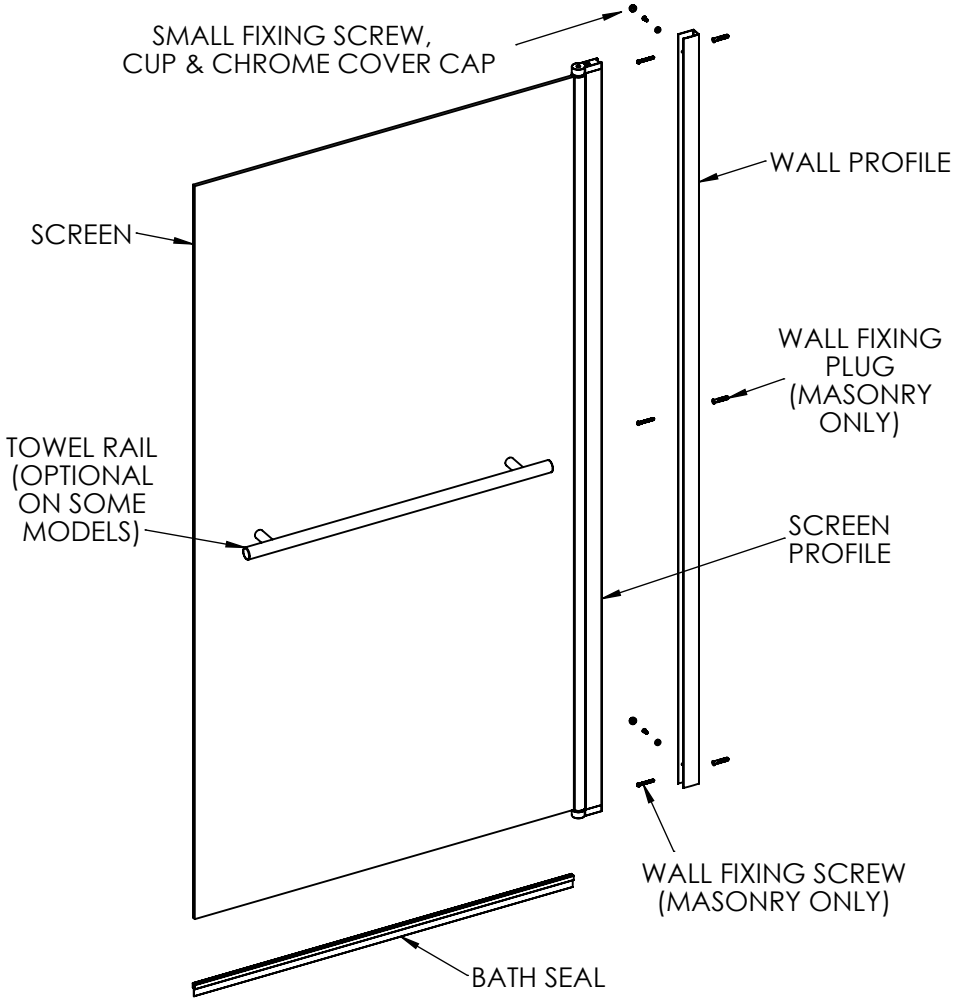

1. PLACE THE WALL PROFILE ON THE BATH IN THE POSITION SHOWN. USE A SPIRIT LEVEL TO ENSURE IT'S TRUE THEN MARK THRO' THE 3 FIXING HOLES WITH A PENCIL. REMOVE THE PROFILE, DRILL THE WALL WITH A 5mm MASONRY DRILL AND THEN FIT THE WALL PLUGS SUPPLIED.
IMPORTANT : PLEASE USE SUITABLE FIXINGS FOR THE SUBSTRATE YOU'RE FIXING TO.

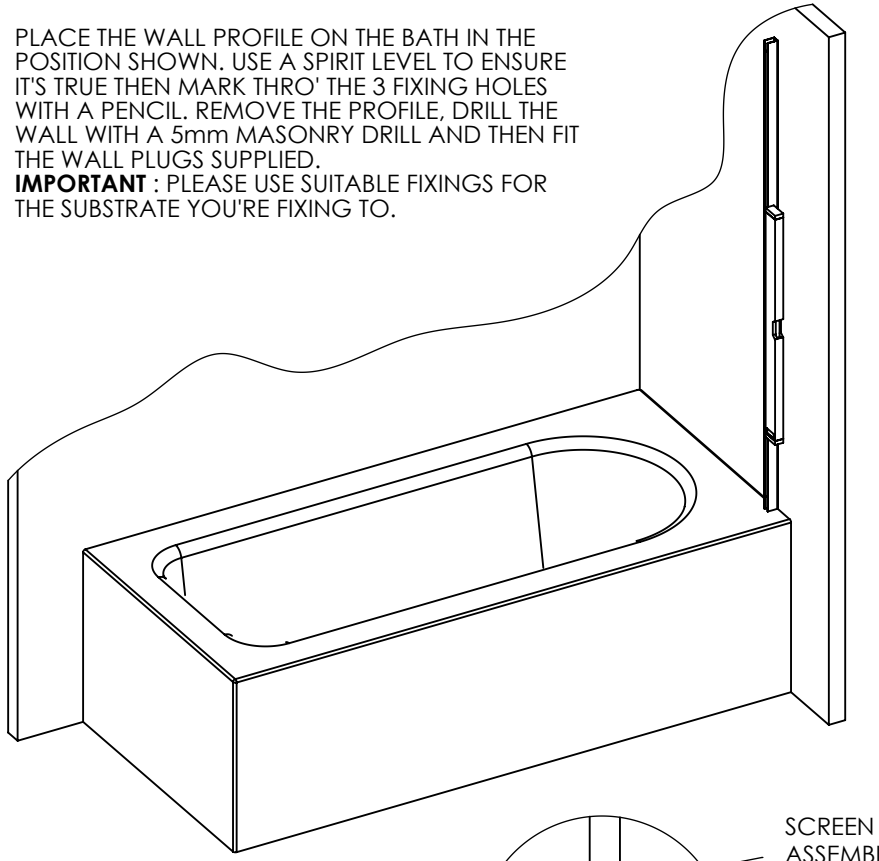

NOTE: IF IN DOUBT, EXTRA FIXINGS CAN BE DRILLED IN THE REAR FACE OF THE WALL PROFILE TO GUARANTEE IT IS SECURED PROPERLY.

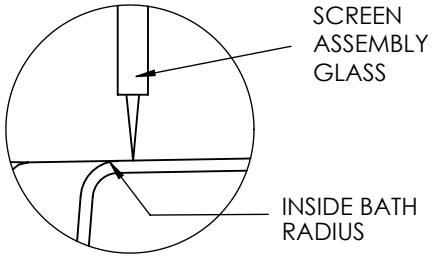

2. NOW SLIDE THE SCREEN ASSEMBLY INTO THE WALL PROFILE.
THE BOTTOM EDGE OF THE GLASS PANEL **MUST** BE PARALLEL TO THE BATH TOP FACE. YOU CAN MAKE A WOODEN SPACER (18mm) TO FIT UNDER THE GLASS SO THERE IS AN EQUAL GAP ALL THE WAY LONG. THE SPACER WILL SUPPORT THE SCREEN PARALLEL WHILST YOU FIX IT IN PLACE AND THEN REMOVED.

3.

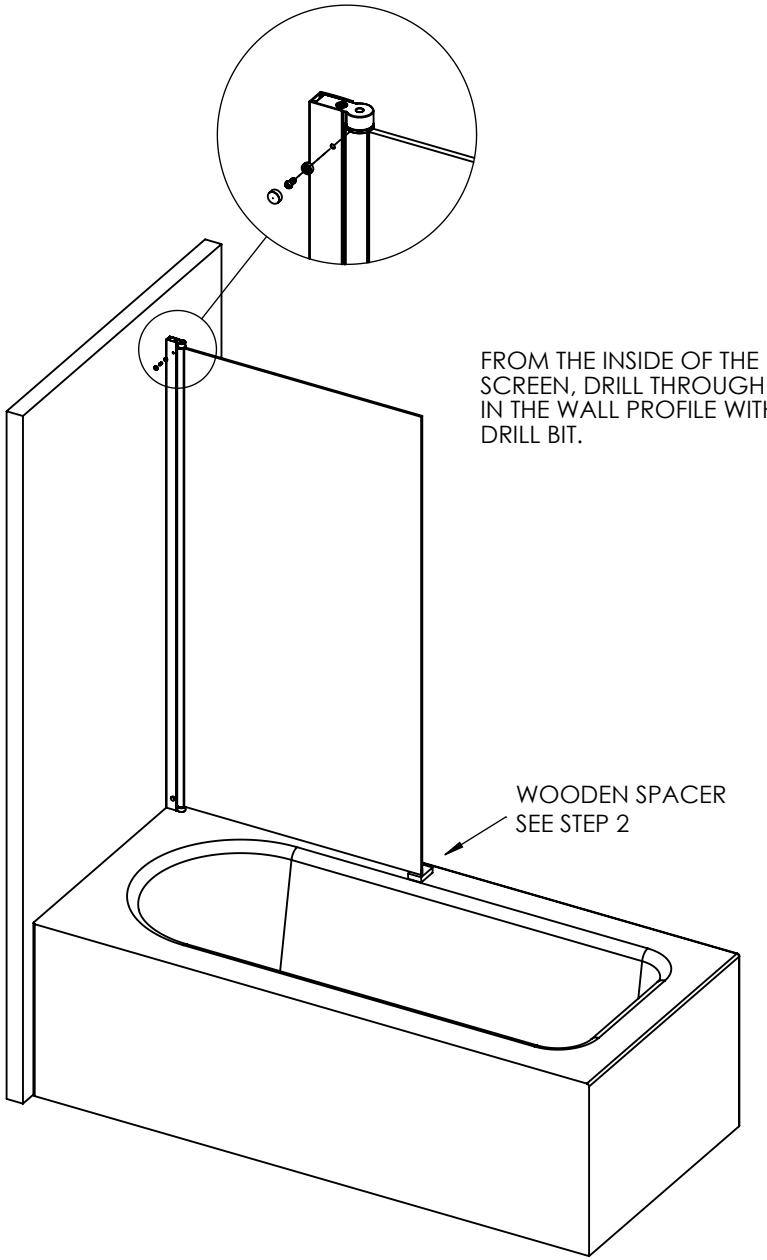

FROM THE INSIDE OF THE BATH SCREEN, DRILL THROUGH THE HOLES IN THE WALL PROFILE WITH A 3mm DRILL BIT.

WOODEN SPACER
SEE STEP 2

FIT THE SMALL SCREWS, CUP WASHER AND CHROME CAP IN 2 POSITIONS. THE SCREEN IS NOW FIXED IN PLACE

EXTRA INFORMATION IF FITTING A SCREEN WITH A FIXED GLASS PANEL.

CHROME BRACING BAR TO THE TOP. **DO NOT REMOVE, ESSENTAIL STRUCTURAL PART.**

FIT THIS SCREEN IN EXACTLY THE SAME WAY AS STEPS 1,2 &3. SLIDE THE FIXED PANEL INTO THE WALL PROFILE.

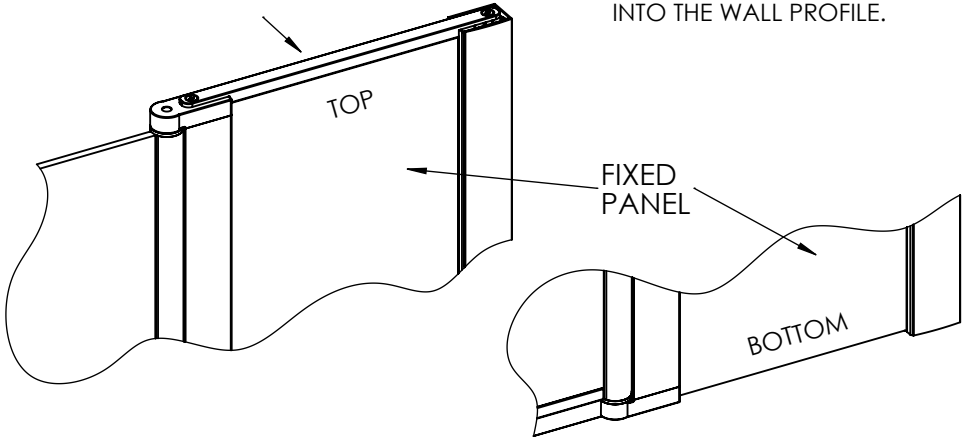

4. SILICONE AS BELOW - - - - ALLOW 24 HOURS TO DRY BEFORE USING.

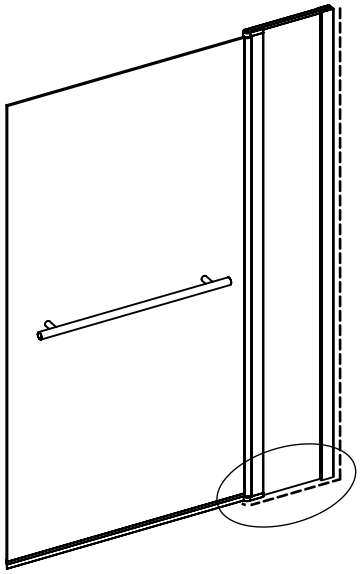

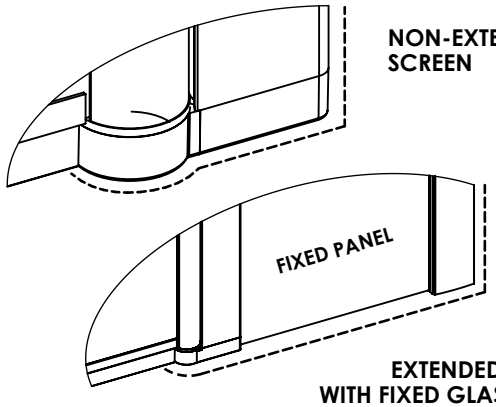

NON-EXTENDED SCREEN

EXTENDED SCREEN WITH FIXED GLASS PANEL

AFTERCARE: ENSURE YOU CLEAN YOUR PRODUCT USING A MILD DETERGENT DILUTED IN WATER REMOVING ANY RESIDUE WITH A SOFT DAMP CLOTH.
MAINTENANCE: ENSURE MOVING PARTS ARE FREE FROM DEBRIS OR SOAP BUILD UP.