Series 4, Wall-mounted cooker hood, 60 cm, clear glass black printed, Black
DWK65DF61B





- **Ergonomic by Design**: generous headroom and a clear view of your cooking.
- **Perfect extraction** : whether recirculating or ducted.
- **DirectSelect**: easy control of power and light settings.
- **LED Lighting**: bright lighting on your cooking with reliable LEDs.
- **Dual filter system**: two filters for improved air quality and odour control.

Technical Data

Color chimney:	Black
Typology:	Wall-mounted
Length electrical supply cord:	150 cm
Height of the appliance:	309 mm
Minimum distance above an electric hob:	450 mm
Minimum distance above a gas hob:	650 mm
Net weight:	10.3 kg
Type of control:	Electronic
Number of speed settings:	3
Max. air extraction:	561 m^3/h
Max. air recirculation:	507 m^3/h
Maximum Air flow:	561 m^3/h
Number of lights:	2
Noise level:	63 dB(A) re 1 pW
Diameter of air outlet:	150 mm
Grease filter material:	Washable aluminium
EAN code:	4242005584154
Connection rating:	223 W
Fuse protection:	4 A
Voltage:	220-240 V
Frequency:	50 Hz
Plug type:	GB plug
Installation typology:	Wall-mounted

Optional accessories

DWZ0GX6K1	Chimney extension 1000 mm
DWZ0GX6L1	Chimney extension 1500 mm
DWZ1GK1I6	Long-life Clean Air recirculation kit
DWZ1XX1E1	reducer
DWZ1XX1H2	backpressure flap standard

4 242005 584154

Series 4, Wall-mounted cooker hood, 60 cm, clear glass black printed, Black
DWK65DF61B

Design:
- Inclined glass common design
- wall-mounted
- Black glass
- Suitable for ducted or recirculating operation
- In recirculation operation, chimless use possible

Core Features:
- Capacitor motor
- 2 x LED 1.5W
- 1 metal grease filter(s).

Comfort Features:
- Electronic control via TouchControl, backlighted
- 3 power levels

Cleaning Comfort:
- Large opening angle of the glass plate for an easy filter accessibility and easy cleaning.
- Easy to clean smooth surfaces and materials.
- Removable metal grease filters dishwasher-safe

Performance Exhaust:
- According to EN 61591 and EN/ IEC 60704-2-13 your appliance can achieve the following values in exhaust mode:
- Speed 1: extraction rate 240 m3/h; noise level 45 dB(A) re1pW
- Speed 2: extraction rate 444 m3/h; noise level 59 dB(A) re1pW
- Speed 3: extraction rate 561 m3/h; noise level 63 dB (A) re1pW
- Energy Efficiency Class: B (at a range of energy efficiency classes from A+++ to D)
- Average Energy Consumption: 72.9 kWh/year*
- Blower Efficiency Class: C*
- Lighting Efficiency Class: A*
- Grease Filtering Efficiency Class: E*

Performance Recirculation:

Technical Information and Sustainability:
- Consumption data:
- Power rating: 223 W
- Voltage: Nominal voltage: 220 - 240 V
- Sustainability:
- Silent blower technology
- Available Long-life Clean Air odour filter with extended lifetime up to 4 times
- The Long-life Clean Air odour filter absorbs intense odours, such as fish, as well as pollen. The lifetime can be extended up to 4 times by refreshing the filter in the oven

Planning and Installation Information:
- Dimensions exhaust air (HxWxD): 741-956 x 590 x 399 mm
- Dimensions recirculating (HxWxD): 776-991 x 590 x 399 mm
- Diameter pipe Ø 150 mm (Ø 150 mm enclosed)
- Electrical cable length 1.5 m
- Back-pressure flap: No

Series 4, Wall-mounted cooker hood, 60 cm, clear glass black printed, Black
DWK65DF61B

Measurements in mm
Appliance in exhaust air mode

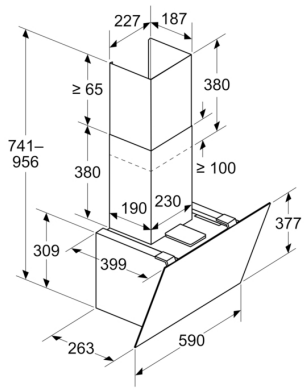

Measurements in mm
Appliance in circulated air mode

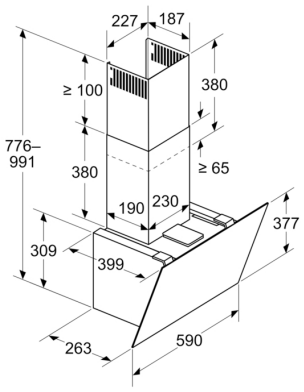

Measurements in mm
Appliance in circulated air mode without duct

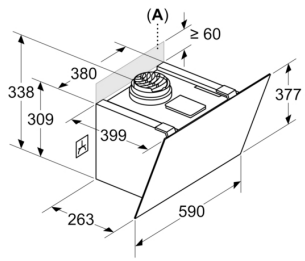

Socket can be fitted to the side of or above the appliance

A: Socket only outside the marked area

Measurements in mm

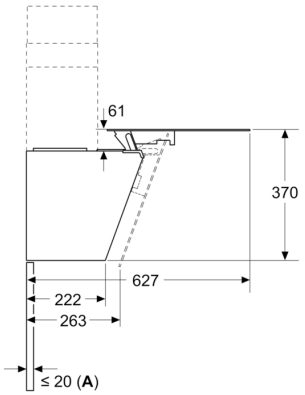

A: Max. back wall thickness

Measurements in mm

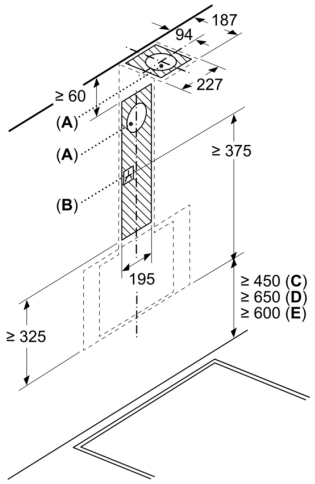

A: Exhaust-air outlet
B: Socket
C: Electric
D: Gas - from upper edge of pan support

E: Electric - for Australia and New Zealand

Measurements in mm
Wall installation with chimney

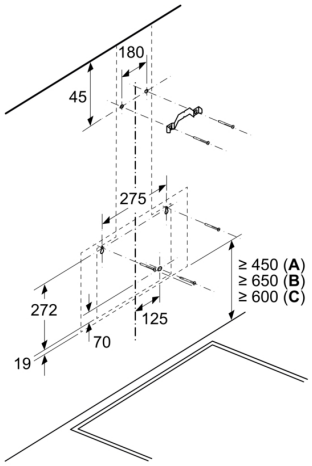

A: Electric

B: Gas - from upper edge of pan support

C: Electric - for Australia and New Zealand