Global Assessment of:

KLW Wood Products

30 Minute Fire Resisting Doorset

Report No: Chilt/A08073 Revision C

Valid From: 27th March 2013
Valid Until: 27th March 2018

committed to excellence

www.chilternfire.co.uk

www.chilterndynamics.co.uk

www.qmark.info

Prepared for:

KLW Wood Products
PL034, Simpang Renggam
Industrial Estate
86200 Simpang Renggam
Johore
Malaysia

This document is confidential and remains the property of Chiltern International Fire Ltd. *The legal validity of this report can only be claimed on the presentation of the complete report.*

Contents

Page No.

1 Introduction 3
2 General Description of Construction 3
3 Leaf Sizes 4
4 Configurations 4
5 Leaf Size Adjustment 4
6 Overpanels 4
7 Glazing 5
8 Door Frames 9
9 Edging Materials 11
10 Leaf Facing Materials 12
11 Intumescent Materials 13
12 Adhesives 14
13 Tested Hardware 14
14 Additional & Alternative Hardware 14
15 Classification of Timber 17
16 Door Gaps 17
17 Structural Opening 17
18 Fixings 17
19 Sealing to Structural Opening 18
20 Insulation 19
21 Smoke Control 20
22 Conclusion 20
23 Declaration by the Applicant 21
24 Limitations 22
25 Validity 22

Appendix A - Performance Data 23
Appendix B - Proprietary 30 Minute Glazing Systems 25
Appendix C - Revisions & Amendments 27
Appendix D - Datasheets 28

1 Introduction

This document constitutes a global assessment relating to KLW Wood Products, 30 minute fire resisting doorsets. The assessment uses established extrapolation and interpretation techniques in order to extend the scope of application by determining the limits for the design based on the tested constructions and performances obtained. The assessment is an evaluation of the potential fire resistance performance, if the elements were to be tested in accordance with BS 476: Part 22: 1987.

2 General Description of Construction

The construction for door leaves covered by this assessment comprises the following designs:

2.1 Design A – Flat Leaves (41mm thick)

Element	Species/Type	Dimensions (mm)	Density (kg/m^3)
Stiles and rails	None fitted	-	-
Core	Chipboard	35 thick	650
Facings	Plywood	3 thick	400
Lippings – vertical edges only	Oak	6 thick	500

2.2 Design B – Applied Panel Feature Leaves (44mm thick)

Element	Species/Type	Dimensions (mm)	Density (kg/m^3)
Stiles and rails	None fitted	-	
Core	Veneered chipboard	25 thick	650
Facings (mock stiles and rails)	Chipboard fixed at the vertical edges of the leaf creating a panelled effect	Top & verticals – 9 thick x 115 wide. Bottom – 9 thick x 180 wide	400
Lippings – vertical edges only	Oak	6 thick	500

2.3 Design C – Flat Leaves (44mm thick)

Element	Species/Type	Dimensions (mm)	Density (kg/m^3)
Stiles and rails	None fitted	-	-
Core	Chipboard	44 thick	650
Facings	Not required	-	-
Lippings – vertical edges only	Oak	6 thick	500

3 Leaf Sizes

Assessment for increased leaf dimensions is based on the design's performance and the characteristics exhibited during test. Data sheets specifying the maximum assessed leaf sizes and graphs showing the permitted gradient between maximum height and width are contained in appendix D.

Doorsets containing leaves with smaller dimensions than those stated are deemed to be less onerous and are therefore automatically covered.

4 Configurations

Based on the test evidence listed in appendix A, this assessment covers the following doorset configurations:

Abbreviation	Description	Design
LSASD	Latched, single acting, single doorset	A, B & C
ULSASD	Unlatched, single acting, single doorset	A & C
DASD	Double acting, single doorset	A & C
LSADD & ULSADD	Latched & unlatched, single acting, double doorset	A & C
DADD	Double acting, double doorset	A & C

Unequal leaf double doorsets are covered by this assessment with no restriction on the smaller leaf dimension.

5 Leaf Size Adjustment

Door leaves of this design may be altered as follows:

Element	Reduction
Leaf – Designs A & C	The manufactured size of the leaf may be reduced in height or width without restriction
Leaf – Design B	The manufactured size of the leaf may be reduced in height or width without restriction, subject to maintaining the minimum width of mock simulated stiles and rails tested (see section 2.2)
Lipping – All designs	The dimensions stated in section 9 may be reduced by 20% for fitting purposes

6 Overpanels

Overpanels of the same construction as the door leaves may be used with these doorset designs, only when separated from the leaves by a transom. The overpanel must be fully contained within the door frame (see following diagram).

As a transom is required to separate the leaf heads from the overpanel, it must be to the same specification as the door frame (see the note under the table in section 8.1).

Door frame joints must utilise one of the following four methods: mortise and tenon joints; half lapped joints; mitre joints; butt joints (see section 8.2).

All methods require joints to be tight, with no gaps, and require mechanical fixing with the appropriate size ring shank nails or screws. Butt joints must be additionally bonded with urea formaldehyde or equivalent.

Overpanels must be fixed by:

- Screwing through the rear of the frame with steel screws passing at least 40mm into the centre line of the overpanel. Fixings must be no more than 100mm from each corner and a maximum of 250mm centres in between.

Maximum overpanel heights are as follows:

- Single doorsets - 2000mm;
- Double doorsets - 1500mm.

The intumescent seals specified for the jambs in appendix D, must be fitted in the concealed edges of the overpanel or frame reveal. Providing the intumescent seals are fitted to all edges of the overpanel, the frame to overpanel junction is permitted to have a maximum 2mm gap tolerance.

7 Glazing

7.1 General

The testing conducted on doorset designs A and C has demonstrated that these designs are capable of tolerating glazed apertures within the following parameters:

- The maximum assessed glazed area is 0.57m^2.
- Doorset design B is not assessed for glazing.
- The glazing system may be the tested system shown in section 7.2, or one of the proprietary systems shown in section 7.3.

7.2 CFG Toughened Glass and Glazing System

The glazing system tested in Chilt/IF09014 must be installed exactly as tested, and illustrated below:

1. Hardwood (min. density 640kg/m³) glazing beads 22mm high x 17mm deep with a 20° chamfer and a 5mm x 5mm bolection return.
2. Beads must be retained in position with 40mm long steel pins, inserted at 30° to the vertical and at no more than 50mm from each corner and at 150mm maximum centres.
3. Aluminium foil is to be used between the intumescent material and face of the glass. The foil must finish flush with the top of the bead.
4. The glass must be fitted with maximum 14mm edge cover.
5. The glass must be fitted to allow for 3mm expansion on all edges.
6. Aperture shape is not restricted, providing thr glazing system and beads are compatible with that shape.
7. Timber for glazing beads must be hardwood (640kg/m³), straight grained, joinery quality, free from knots, splits and checks.
8. Glazed opening must not be less than 120mm from any edge, with a minimum dimension of 100mm between apertures.
9. Multiple apertures are permitted, subject to point 8 above.

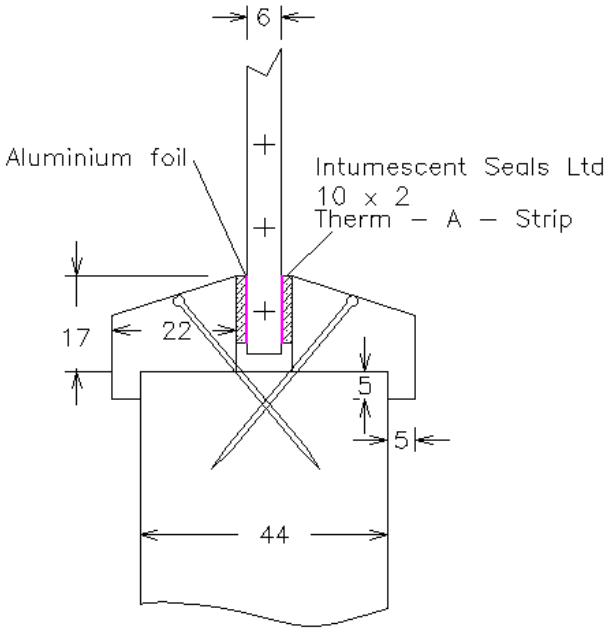

7.3 Assessed Glazing Systems

The glazing system may be as tested, or alternatively one of the following tested proprietary systems:

Glazing System	Manufacturer
1. Therm-A-Strip 30	Intumescent Seals Ltd.
2. Fireglaze 30	Sealmaster Ltd.
3. Firestrip 30	Hodgsons Sealants Ltd.
4. Pyroglaze 30	Mann McGowan Ltd.
5. System 36	Lorient Polyproducts Ltd.
6. FF1	Lorient Polyproducts Ltd.
7. R8913	Pyroplex

7.4 Assessed Glass Products

Assessed glass types are as follows:

Glass Type	Manufacturer	Thickness (mm)	Max. Area (m^2)
1. Pyroshield	Pilkington Group Ltd.	6 & 7	0.57
2. Pyroshield 2	Pilkington Group Ltd.	6 & 7	0.57
3. Pyran S	Schott Glass Ltd.	6	0.57
4. Pyrostem	CGI Ltd.	6	0.57
5. Pyroguard EW 30	CGI Ltd.	7	0.57
6. Pyranova S3.07	Schott UK Ltd.	7	0.57
7. Pyrobelite 7	AGC Flat Glass UK	7	0.57
8. Pyrodur 30-104	Pilkington Group Ltd.	7	0.57
9. Pyrodur 60-10	Pilkington Group Ltd.	10	0.57
10. Pyroguard EW MAXI	CGI Ltd.	11	0.57
11. Pyrobelite 12	AGC Flat Glass UK	12	0.57
12. Pyrodur 60-20	Pilkington Group Ltd.	13	0.57
13. Swissflam Lite	Vetrotech Saint Gobain	14	0.57
14. Pyranova 15-S2.0	Schott UK Ltd.	15	0.57
15. Pyroguard EI 30	CGI Ltd.	15	0.57
16. Pyrostop 30-10	Pilkington Group Ltd.	15	0.57
17. Pyrobel 16	AGC Flat Glass UK	16	0.57

Notes:

1. All glass types must be fitted strictly in accordance with the manufacturers' tested details/installation requirements, particularly with reference to suitable tolerances for expansion of the glass pane;
2. Glass types 14-17 are fully insulating for 30 minutes in terms of the criteria set out in BS 476: Part 20: 1987.

7.5 Glazing Beads and Installation

Glazing beads must be from hardwood as specified in the following table:

Material	Profile	Min. Density (kg/m³)	Application
Hardwood	Splayed	640	All proprietary systems detailed in section 7.3 and all glass types listed in section 7.4
Hardwood	Square	640	Proprietary systems 1-3 detailed in section 7.3 with glass types 5 & 7-17 listed in section 7.4

An alternative to the proprietary splayed bead systems is a square hardwood bead which may be used either with or without a 3mm high x 3mm deep quirk (see appendix B for diagram of profile).

The shape of glazed apertures is not restricted providing the glazing system can accommodate the profile.

Glazed apertures must not be nearer than 100mm to any leaf edge. Multiple apertures are acceptable up to the maximum approved area with a minimum dimension of 80mm separating the apertures.

All timber for glazing beads must be joinery quality, straight grained hardwood and free from splits, checks and knots.

Glazing beads must be retained in position with 40mm long No. 6 or 8 steel wood screws, inserted at 35-40º to the vertical at no more than 50mm from each corner and at 140mm maximum centres.

False timber beads may be applied to glass types 7-9 and 11-17 using one of the following intumescent glazing products:

Glazing System	Manufacturer
1. Therm-A-Strip 30	Intumescent Seals Ltd.
2. Fireglaze 30	Sealmaster Ltd.
3. Firestrip 30	Hodgson Sealants Ltd.
4. Envirograf Product 77 - G10/10	Intumescent Systems Ltd.
5. Intumescent mastic or silicone tested for glazing applications to BS 476: Part 22: 1987 or BS EN 1634-1: 2000 or 2008	Various

Seals for false glazing beads must be a minimum of 10mm wide x 0.5 - 3mm thick. Preformed strip systems 1-4 may be self adhesive and grooved into the rear of the glazing bars. Sectional drawings detailing the proprietary glazing systems are contained in appendix B.

8 Door Frames

8.1 Door Frame Construction

Door frames for these doorset designs may be timber or MDF as follows:

Material	Section Size (mm)	Min. Density (kg/m³)	Application
Softwood	70 x 32	510	All configurations
MDF	70 x 30	700	All configurations
Hardwood	70 x 32	510	All configurations

All door frame timber must be to class J30 as specified in BS EN 942: 2007, subject to repair of any defects (see section 15).

A 12mm deep planted stop is adequate for single acting frames whilst double acting frames may be scalloped or square (see diagram below).

Frame joints may be mortice and tenoned, mitred, half lapped or butted and with no gaps (see section 8.2). All jointing methods require mechanical fixing with the appropriate size ring shank nails or screws.

The following diagram depicts the assessed frame profiles and dimensions:

A = min. 70mm B = min. 30-32mm C = min. 12mm
R = radius from floor spring 8mm max radius to create a maximum 2mm edge profiling

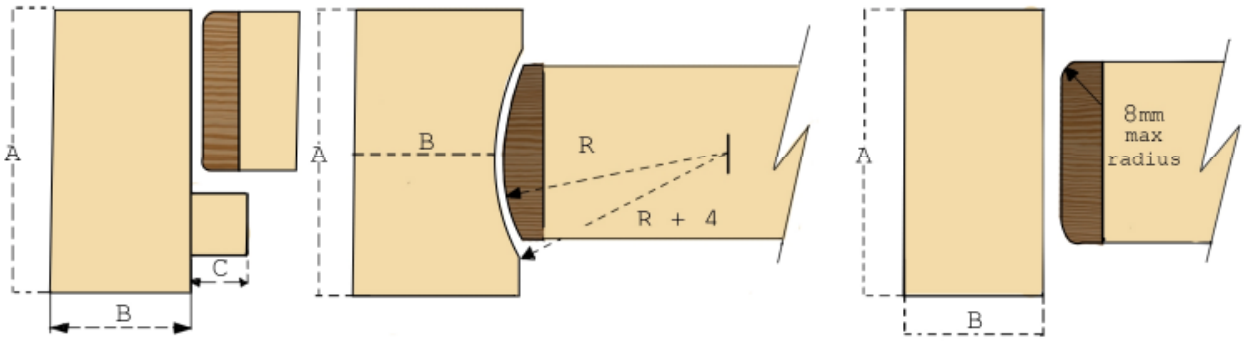

Standard **Scalloped** **Profiled edges**

8.2 Door Frame Joints

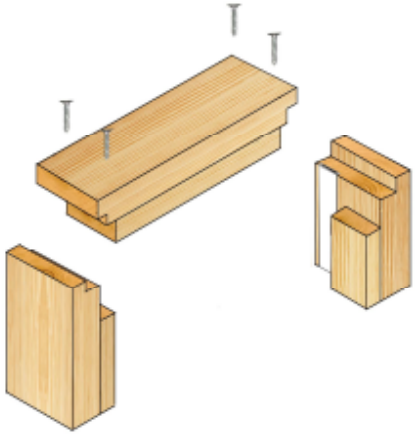

Half Lapped Joint

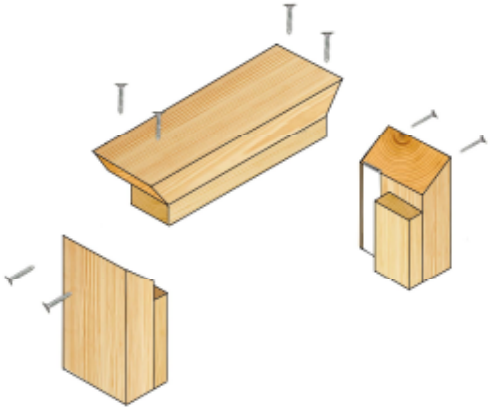

Mitre Joint

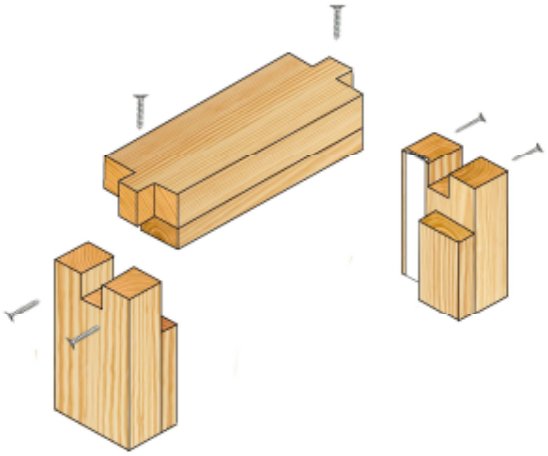

Mortice and Tenon Joint

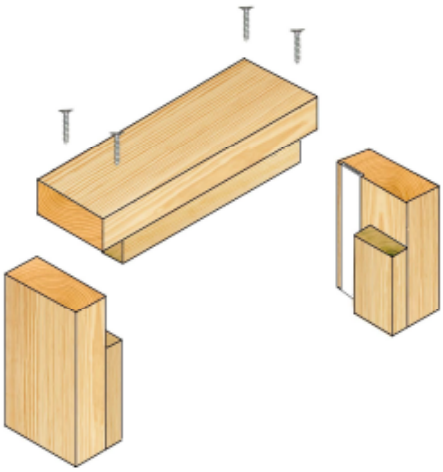

Butt Joint

Note: Drawing is representative of each type of door frame joint; actual construction in terms of intumescent seal location and material, etc. must be as the text within this document specifies.

8.3 Door Frame Installations

The following diagrams indicate acceptable and unacceptable door frame installations:

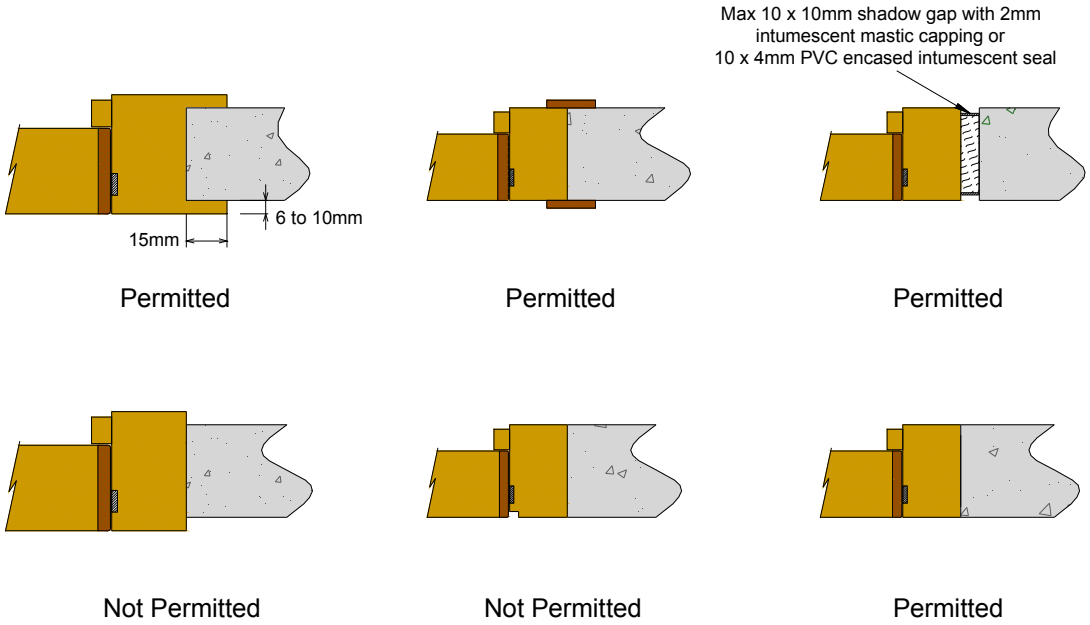

9 Edging Materials

9.1 Timber Lippings

The assessed designs must be lipped in accordance with the following specification:

Material	**Size** (mm)	**Min. Density** (kg/m³)
Timber for lippings must be straight grained, joinery quality hardwood, free from knots, splits or checks	Square = 6mm to 11mm thick	500
	Rounded = 8mm-13mm thick with a maximum of 2mm profiling permitted at corners of lipping (see section 8.1)	
	Rebated = Not permitted	

Notes:

1. Single & double doorsets must be lipped on the vertical edges, but may be lipped on all edges if required.
2. A 2.5^0 chamfer is permitted to the lipping at the leading edge of leaves providing the door gaps meet the requirements of section 16.

10 Leaf Facing Materials

10.1 Design A – Flat Leaves (41mm thick)

The following alternative facing materials have been assessed as suitable for use with this door design:

Material	**Minimum Density** (kg/m³)	**Thickness** (mm)
Plywood	400	3
Chipboard	650	3
MDF	700	3

10.2 Design B - Applied Panel Feature Leaves (44mm thick)

The following facing materials have been assessed as suitable for use with this door design:

Element	**Material**	**Min. Density** (kg/m³)	**Dimensions** (mm)
Top rail	Chipboard	650	9 thick x 100-150 wide
Stiles	Chipboard	650	9 thick x 100-150 wide
Bottom rail	Chipboard	650	9 thick x 150-250 wide
Intermediate framing	Chipboard	650	9 thick x 60-150 wide

10.2.1 Variation to Construction

The following variation to the construction of these designs has been assessed as suitable:

1. Door leaves may be constructed to simulate a minimum of one, and a maximum of ten panels.
2. In addition to the flat panel design tested, a raised and fielded option is acceptable. The area between the simulated framing may be recessed to a maximum of 3.5mm each side of the door and a raised & fielded panel may be bonded to the following specification:

Material	**Min. Density** (kg/m³)	**Dimensions** (mm)	**Fixing Method**
MDF	700	Min. 4 thick, raised to max. 12 thick	Bonding with UF

3. Any profile of MDF or timber moulding up to dimensions of 30mm x 30mm may be surface applied.

10.3 Design C – Flat Leaves (44mm thick)

The facings for 44mm thick flat leaves of design C are integral with the core construction and therefore alternative materials are not permitted.

10.4 Decorative and Protective Facings

The following additional facing materials are permitted for all door designs (A, B & C) since they would degrade rapidly under test conditions without significant effect:

Facing Material	**Maximum Permitted Thickness** (mm)
Paint	0.5
Timber veneers	2
PVC/plastic laminates	2
Decorative paper/non-metallic foil	0.5

Notes:

1. Metallic facings are not permitted except for push plates and kick plates.
2. Materials must not conceal intumescent strips.
3. PVC/plastic laminates must not be applied to the edges of leaves.

11 Intumescent Materials

11.1 General

It is important that the type, size and fitting detail for the intumescent seals remains as tested. These products can often exhibit significantly different characteristics, which could alter the performances obtained during test, and therefore they must not be considered interchangeable, irrespective of whether the product has been tested and the seal dimensions are maintained.

The intumescent materials tested for this doorset design are as follows:

Application	**Location**	**Product/Manufacturer**	**Size** (mm)
Edge seals	See appendix D	1. Lorient Polyproducts Ltd. - Type 617	See appendix D
Locks/ latches	Under latch keep & face plates[1]	1. Lorient Polyproducts Ltd. – MAP paper; 2. Dufaylite Development Ltd. – Interdens; 3. Sealmaster Ltd. – G30; 4. Intumescent Seals Ltd. – Therm-A-Strip.	1 thick
Hinges	Under both blades[2]	1. Lorient Polyproducts Ltd. – MAP paper; 2. Dufaylite Development Ltd. – Interdens; 3. Sealmaster Ltd. – G30; 4. Intumescent Seals Ltd. – Therm-A-Strip.	1 thick
Flush bolts	Lining all sides of the mortice	As above	1 thick
Floor springs	Lining all sides of the top pivot mortice & underneath the strap plates	As above	2 thick

Notes:

1. All double doorsets require the locks and latches to be protected, as defined in the table above. Locks and latches on single doorsets do not require protection.
2. All doorsets with leaves over 2300mm high must use hinge protection as defined in the table above.
3. The seal specification for each configuration is shown in appendix D.

12 Adhesives

The following adhesives must be used in construction:

Element	Product/Manufacturer
Core	Urea formaldehyde
Facings, simulated framing & applied panels	Urea formaldehyde
Lipping	PVAC

13 Tested Hardware

The following hardware has been successfully incorporated in the test on these designs:

Element	Make/type	**Size** (mm)
Hinges	3No. Royde & Tucker H105 Hi-load lift-off type hinges	100 x 35 (blade size)
Closer	Dorma Door Controls Ltd. TS73V surface-mounted overhead closer	233 x 60 (footprint size)
Locks/latches	Standard tubular mortise latch - disengaged	57 x 26 (forend size)
Furniture	Aluminium lever handle	100 x 38 (footprint size)

14 Additional & Alternative Hardware

14.1 Latches & Locks

Latches and locks must either be as tested, or alternatively components with the following specification are acceptable:

Maximum forend and strike plate dimensions	235mm high by 25mm wide by 4mm thick
Maximum body dimensions	165mm high by 100mm wide by 18mm thick
Intumescent protection	See section 11
Materials	All parts essential to the locking/latching action (including the latch bolt, forend and strike) to be steel

14.2 Hinges

Door leaves must be hung on a minimum of 3 hinges, whilst doorsets containing leaves over 2400mm high must use 4 hinges. Products with the following specification are acceptable:

Blade height	90 – 120mm
Blade width (excluding knuckle)	30 – 35mm
Blade thickness	2.5 - 4mm
Fixings	Minimum of 4No. 30mm long No. 8 or No.10 steel wood screws per blade
Materials	Steel or stainless steel
Hinge positions (to top of blade)	Top: 120 – 180mm from the head 2nd and 3rd: Equispaced between top and bottom Bottom: 150 – 250mm from the foot
Intumescent protection	See section 11

14.3 Automatic Closing

Automatic closing devices, must either be as tested or components of equal specification that have demonstrated contribution to the required performance of these types of 30 minute doorset designs, when tested to BS 476: Part 22: 1987 or BS EN 1634-1: 2000 or 2008.

Note: The top pivots to floorspring assemblies must be protected with 2mm thick intumescent gasket (see section 11) or alternatively the manufacturers tested intumescent pack.

14.4 Flush Bolts

Flush bolts may be incorporated centrally into the top and bottom of one meeting edge, providing the following maximum dimensions are not exceeded and the components are fitted opposite the edge fitted with intumescent strips:

- 200mm long x 20mm deep x 22mm wide

Flush bolts must be steel or brass and the mortice must be as tight to the mechanism as is compatible with its operation. All edges of the mortice must be protected with intumescent gaskets as specified in section 11. Alternatively, the hardware manufacturers tested gaskets may be used.

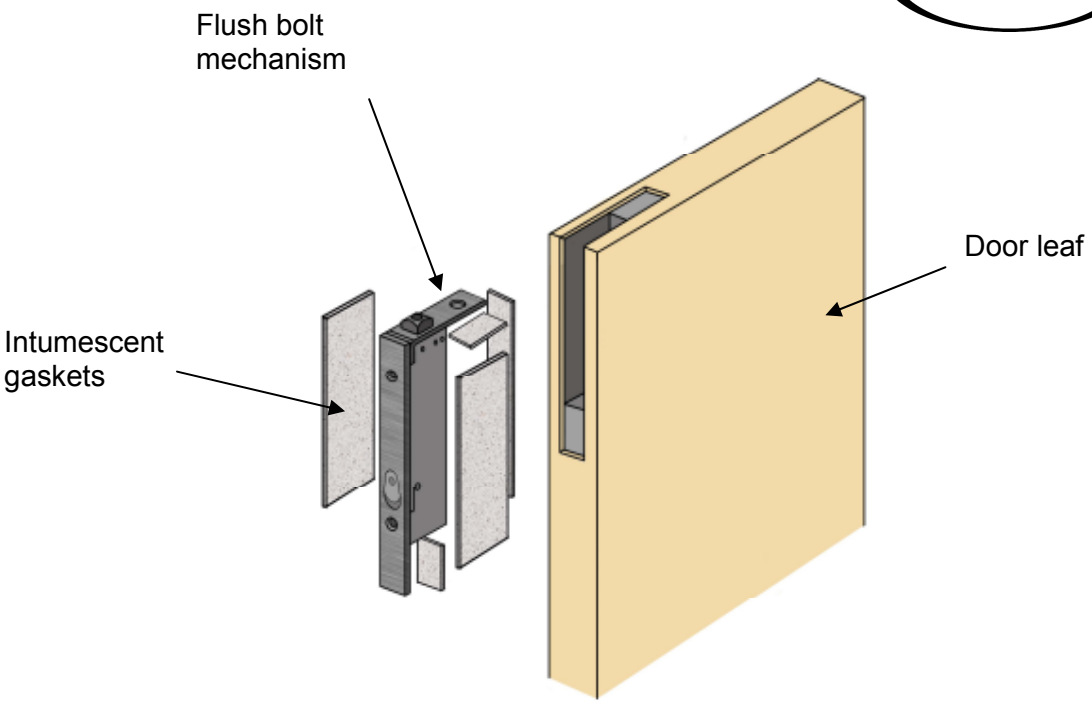

14.5 Pull Handles

These may be surface-fixed to the door leaf provided that they are steel or brass and the length is limited to 1200mm between the fixing points. No additional intumescent protection is required provided that the hole for the bolt through the leaf is tight.

14.6 Push Plates/Kick Plates

Face-fixed hardware such as push plates and kick plates may be fitted to the doorsets on both sides of the door leaf. These items of hardware are permitted up to a maximum of 20% of the door leaf area if mechanically fixed and a maximum of 30% if bonded with a contact or other thermally softening adhesive. Plates must not return around the door edges.

14.7 Door Security Viewers

Door security viewers with brass or steel bodies of a diameter less than or equal to 15mm may be used provided that the through-hole is bored tight to the case of the viewer (maximum tolerance +1mm). Lenses must be glass and the item must be bedded in to a tested intumescent mastic.

14.8 Panic Hardware

Panic hardware may be fitted, provided that its installation does not require the removal of any timber from the leaf, stop or frame reveal and it in no way interferes with the self-closing action of the door leaf.

14.9 Acoustic, Weather and Dust Seals

Silicon based flame retardant acoustic, weather and dust seals (e.g. Norseal 710, 720 and Lorient IS1212, IS1511, IS7025, IS7060) may be fitted to this doorset design without compromising the performance, providing their fitting does not interfere with the activation of the intumescent seals or hinder the self closing function of the leaves.

14.10 Threshold Seals

The following types of automatic threshold drop seals may be recessed in to the bottom rail of leaves to this design without compromising the performance:

Manufacturer	Product
Lorient Polyproducts	IS8010si
Pemko	411 – AR
Raven	RP8Si
Athmer	Sound-Ex Duo L-15
Norseal	810

14.11 Letter Boxes/Plates

Letter boxes/plates may be fitted providing the product can demonstrate contribution to the required performance of this type of 30 minute doorset design, when tested to BS 476: Part 22: 1987 or BS EN 1634-1: 2000 or 2008, when installed within a timber based doorset of comparable thickness. Margins to the leaf edges must remain as detailed for glazing. The position of the letter box/plate will be dictated by the pressure regime tested in the proving evidence (normally below mid height). For doorset design B, letter plates must be fitted through 44mm thick framing, i.e. a mid-rail.

15 Classification of Timber

Other than as specified within specific sections of this report, all timber must meet or exceed class J30 as specified in BS EN 942: 2007, providing any defects are repaired.

16 Door Gaps

For fire resistance performance, door gaps and alignment tolerances must fall within the following range:

Location	Dimensions
Door edge gaps	Representative of those tested but as a guideline, a minimum of 2mm and a maximum of 4mm
Alignment tolerances	Leaves must not be proud of each other or from the door frame by more than 1mm
Threshold	10mm between bottom of leaf and top of floor covering

17 Structural Opening

The supporting construction must be capable of staying in place and intact for the full period of fire resistance required from the doorset.

18 Fixings

The frame jambs are to be fixed to the supporting construction using steel fixings at 500mm maximum centres. The fixings must be of the appropriate type for the supporting construction and must penetrate to a minimum depth of 50mm. For doorsets without fanlights or overpanels, it is not necessary to fix the frame head, although packers must be inserted.

Where fanlights or overpanels are fitted it will be necessary to secure the head of the frame using the fixing specification for the jambs as stated above.

19 Sealing to Structural Opening

The door frame to structural opening gap must be protected using one of the following methods:

1. Gaps up to 10mm must be sealed on both sides with a 10mm depth of acrylic intumescent mastic, fire tested for this application to BS 476: Part 22: 1987 or BS EN 1634-1: 2000 or 2008. Joint must be fitted with 15mm thick architraves overlapping at least 15mm each side.	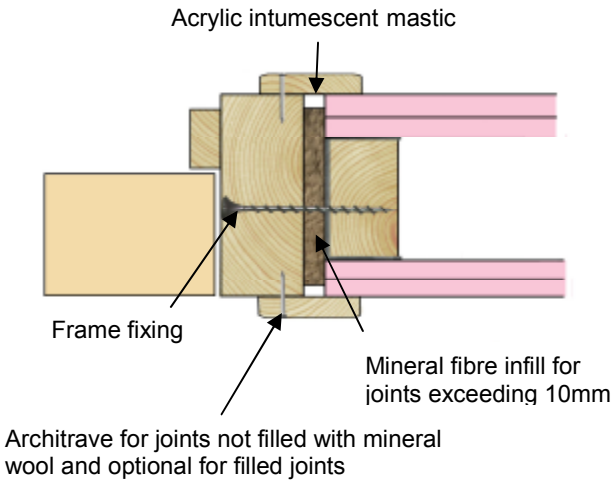
2. Gaps between 10mm and 20mm must be tightly packed with mineral fibre capped on both sides with a 10mm depth of acrylic intumescent mastic, fire tested for this application to BS 476: Part 22: 1987 or BS EN 1634-1: 2000 or 2008. Architraves are optional.	
3. Gaps up to 20mm filled with proprietary fire stopping product (e.g. expanding PU foam or preformed compressible intumescent foam). Products must be tested for this application to BS 476: Part 22: 1987 or BS EN 1634-1: 2000 or 2008. Joint must be fitted with 15mm thick architraves overlapping at least 15mm each side.	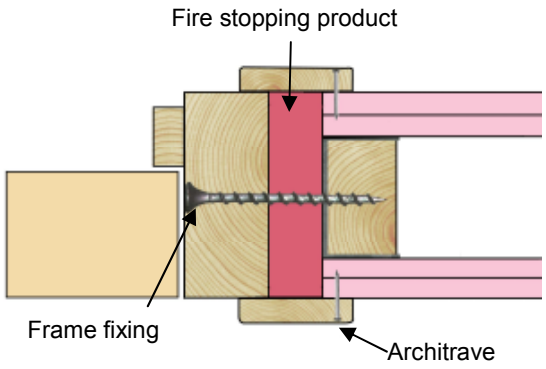
4. Timber based or non-combustible subframe up to 50mm thick, with no gaps between the components. Joint must be fitted with 15mm thick architraves overlapping at least 15mm each side.	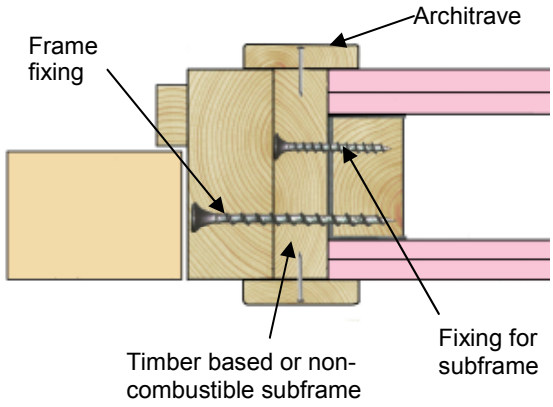

5. Timber based or non-combustible subframe up to 50mm thick, with gaps up to 10mm between the components filled on both sides with 10mm depth of acrylic intumescent mastic or full depth expanding PU foam, fire tested for this application to BS 476: Part 22: 1987 or BS EN 1634-1: 2000 or 2008. Joint must be fitted with 15mm thick architraves overlapping at least 15mm each side.	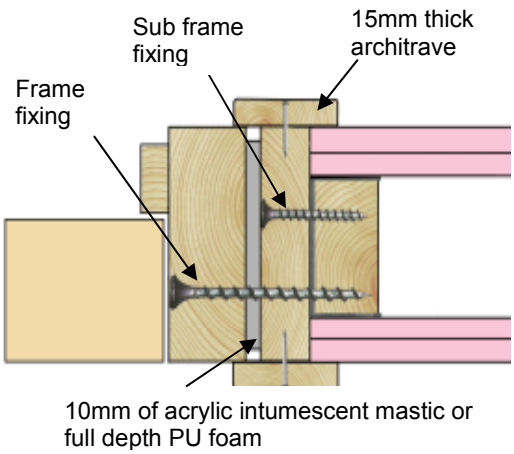

Guidance for various methods of sealing the frame to structural opening gap is also given in BS 8214: 2008, “Code of practice for fire door assemblies”, which may be referred to where appropriate.

Note: Drawings are representative of doorset installation only; actual installations must be as the text within this document specifies.

20 Insulation

Insulation performance may be claimed for a doorset to this design meeting the following:

Type	Details
Partially insulating	Doorsets with timber frames incorporating up to 20% of non-insulating glazing
Fully insulating	Doorsets unglazed or including 30 minute insulating glazing (e.g. Pyrostop 30-10 or Pyrobel 16)

21 Smoke Control

21.1 General

If the doorset design is required to provide a smoke control function to comply with Building Regulations, in the absence of a suitable pressurisation system, the doorset must meet one of the following criteria:

(a) have a leakage rate not exceeding $3m^3$/m/hour (head and jambs only) when tested at 25Pa under BS 476 *Fire tests on building materials and structures*, Section 31.1 - *Methods for measuring smoke penetration through doorsets and shutter assemblies, Method of measurement under ambient temperature conditions*; or

(b) meet the additional classification requirement of Sa when tested to BS EN 1634-3: 2004 - *Fire resistance tests for door and shutter assemblies*, Part 3 – *Smoke control doors*.

Smoke seals or combined intumescent/smoke seals that are fitted to the door to achieve the performance requirements specified above, must have been tested in accordance with the associated test method. Providing the smoke seals, any interruptions, door gaps, and the type/configuration of the doorset are consistent with the detail tested, the doorset will comply with current smoke control legislation under approved document B; and a suffix 'S' or 'Sa', as appropriate, may be added to the designation. Any other components installed where smoke leakage may occur must also be taken into account.

Note: The incorrect specification and fitting of smoke seals may impair the operation of a doorset and therefore compromise the fire resistance performance. Advice should be sought from the seal manufacturers regarding the correct specification and installation of smoke seals or combined smoke and intumescent seals.

21.2 Further Considerations

Note that there is other guidance available, including BS EN 9999-2008 - *Code of practice for fire safety in the design, management and use of buildings,* which may impose different or additional requirements, such as consideration of the gap between door leaf and threshold.

Responsibility for the appropriate smoke sealing specification and performance of the doors should be agreed between the relevant parties (i.e. specifier, manufacturer, contractor) prior to commencing manufacture and/or installation.

22 Conclusion

If the KLW Wood Products doorset designs, constructed in accordance with the specification documented in this global assessment, were to be tested in accordance with BS 476: Part 22: 1987, it is our opinion that they would provide a minimum of 30 minutes integrity and insulation (subject to section 20).

23 Declaration by the Applicant

1) We the undersigned confirm that we have read and comply with obligations placed on us by FTSG Resolution No. 82: 2001.
2) We confirm that the component or element of structure, which is the subject of this assessment, has not to our knowledge been subjected to a fire test to the Standard against which this assessment is being made.
3) We agree to withdraw this assessment from circulation should the component or element of structure be the subject of a fire test to the Standard against which this assessment is being made.
4) We are not aware of any information that could adversely affect the conclusions of this assessment.
5) If we subsequently become aware of any such information we agree to ask the assessing authority to withdraw the assessment.

Signed:

Name:

For and on behalf of: KLW Wood Products

24 Limitations

The following limitations apply to this assessment:

1) This assessment addresses itself solely to the elements and subjects discussed and does not cover any other criteria. All other details not specifically referred to should remain as tested or assessed.
2) This assessment is issued on the basis of test data and information to hand at the time of issue. If contradictory evidence becomes available, CIF reserves the right to withdraw the assessment unconditionally but not retrospectively.
3) This assessment has been carried out in accordance with Fire Test Study Group Resolution No. 82: 2001.
4) Opinions and interpretations expressed herein are outside the scope of UKAS accreditation.
5) This assessment relates only to those aspects of design, materials and construction that influence the performance of the element(s) under fire resistance test conditions. It does not purport to be a complete specification ensuring fitness for purpose and long-term serviceability. It is the responsibility of the client to ensure that the element conforms to recognised good practice in all other respects and that, with the incorporation of the guidance given in this assessment, the element is suitable for its intended purpose.

25 Validity

1) The assessment is initially valid for 5 years after which time it must be submitted to Chiltern International Fire Ltd. for technical review.
2) This assessment report is not valid unless it incorporates the declaration given in Section 23 duly signed by the applicant.

Signature:	J. Godfrey	Simon Bailey	
Name:	**J Godfrey**	**S Bailey**	**P N Barker**
Title:	Product Assessor	Product Assessor	Senior Consultant

Appendix A

Performance Data

Primary Data

Report No.	Configuration	Leaf Size (mm)	Test Standard	Performance (mins)
Chilt/RF07159	A – ULSADD (unequal pair–flat)	2050x915x41 + 2050x400x41	BS 476: Pt 22: 1987	27[1]
	B – LSASD (simulated panel)	2050x915x44	BS 476: Pt 22: 1987	41

1 – Assessment of Premature Failure

The specimen failed under the integrity criterion at 27 minutes due to continuous flaming above the latch position. This is considered to be due to erosion caused by conducted heat from the metal components in conjunction with the lack of intumescent gaskets protecting this element.

Therefore, assessment is made on the basis that protection in the form of intumescent gaskets must be provided for all double doorsets constructed to this design (see section 11 for range of assessed products).

Note:

Assessment of Design C

Design A was tested with a 35mm thick particleboard core faced with 3mm plywood producing a 41mm thick leaf.

Design B was tested as a 25mm thick particleboard core with 9mm thick applied particleboard stiles and rails, producing a leaf that was 44mm thick at the perimeter.

On the basis that both the tested door designs successfully demonstrated the performance of the particleboard core at a reduced thickness compared to the proposed 44mm design C, we are confident that a single thickness of the board would provide at least the same results.

Doorsets with 44mm thick leaves must be constructed to the specification detailed for design C, contained in section 2.3. The leaf size range applied to design A has also been applied to design C.

Supplementary Data

Report No.	Configuration	Leaf size (mm)	Test Standard	Performance (mins)
Chilt/IF08080 (1)	LSASD	990h x 915w x 43t	BS 476: Pt 22: 1987	34
Chilt/IF09014 (2)	LSASD	990h x 906w x 44t	BS 476: Pt 22: 1987	35

1 – Assessment of Increased Maximum Glazed Area

Test Chilt/IF08080 used to justify increased maximum glazed area from 0.2m^2 up to 0.57m^2. Glazing systems must be in accordance with the details outlined in section 7 and appendix B of this assessment.

2 – Assessment of Alternative Glazing

Test Chilt/IF09014 used to justify increased maximum glazed area from 0.2m^2 up to 0.57m^2, and using 6mm CFG toughened glass. Particular care should be taken when glazing modified toughened glass and must be in accordance with details in section 7.

Appendix B

Proprietary 30 Minute Glazing Systems

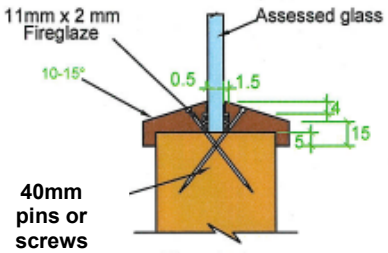

Fireglaze
Sealmaster Ltd

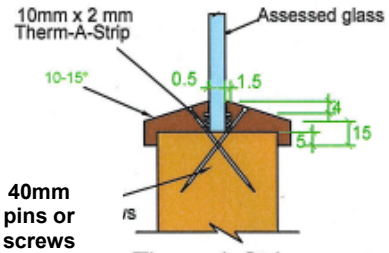

Therm-A-Strip
Intumescent Seals Ltd

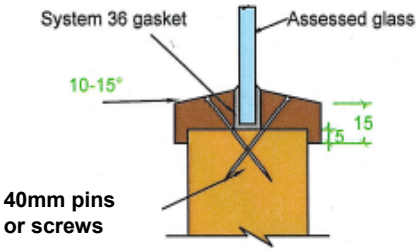

System 36
Lorient Polyproducts Ltd

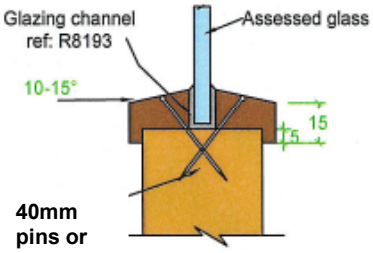

R8913
Pyroplex

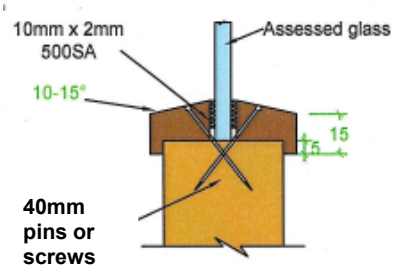

Pyroglaze 30
Mann McGowan Ltd

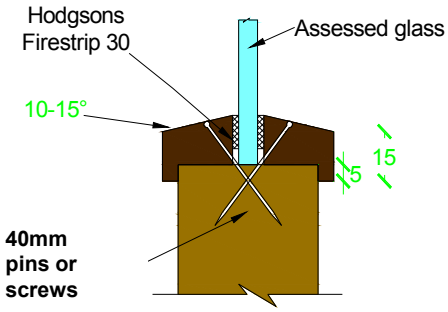

Firestrip 30
Hodgsons Sealants Ltd

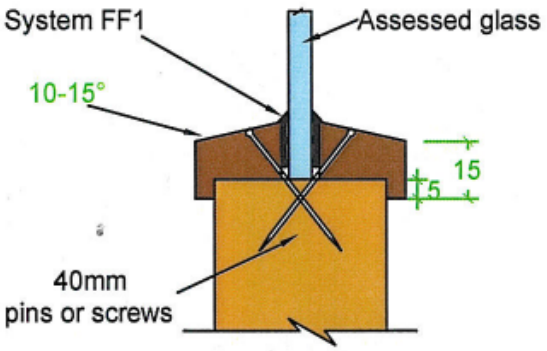

System FF1
Lorient Polyproducts Ltd

Assessed Square Glazing Bead Profiles

(The following square bead profile may be used as an alternative to the splayed beads detailed above - refer to section 7 for glazing system and glass restrictions.)

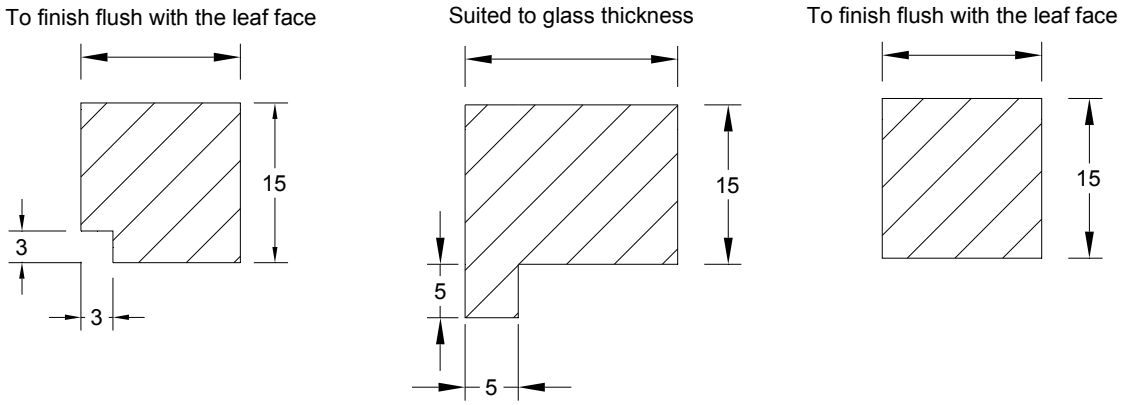

Appendix C

Revisions and Amendments

Revision No.	Date	Description
A – CIFL Ref. 08172	09/09/2008	Inclusion of assessed 44mm thick solid particleboard doorsets – Design C.
B – CIFL Ref. 09090	12/06/2009	Inclusion of glass type and increase glazing size. Correction to graphs in appendix D of intumescent seal type.
C – CIFL Ref. 12309	27/03/2013	Review and revalidation with assessed inclusion of MDF door frames.

Appendix D

Datasheets for:

KLW Wood Products

30 Minutes Fire Resisting Doorsets

KLW Wood Products - Designs A & C – 41 & 44mm Flat Doors

Latched & Unlatched, Single & Double Acting, Single Doorsets

Leaf Sizes	Configuration		Height (mm)		Width (mm)
	LSASD	From:	2050	x	1155
		To:	2569	x	915
	ULSASD & DASD	From:	2050	x	1130
		To:	2519	x	915
Maximum Overpanel Height (mm)		Transomed	2000		
Glazing		Maximum Glazed Area	0.57m^2 - see section 7 for details		
		Approved Systems	See section 7 and appendix B		
Frame Specification (see section 8)		Min. Section (mm)	70 x 32	70 x 32	70 x 30
		Material	Softwood	Hardwood	MDF
		Min. Density (kg/m^3)	510	510	700

Intumescent Materials: Lorient Polyproducts Ltd. – Type 617

Head: 1No. 15x4mm strip fitted centrally in the frame reveal. For leaves over 2300mm high, increase to 20x4mm.

Jambs & Transomed Overpanel: 1No. 15x4mm fitted centrally in the frame reveal.

Hardware Protection: See section 11.

Maximum Door Leaf Size

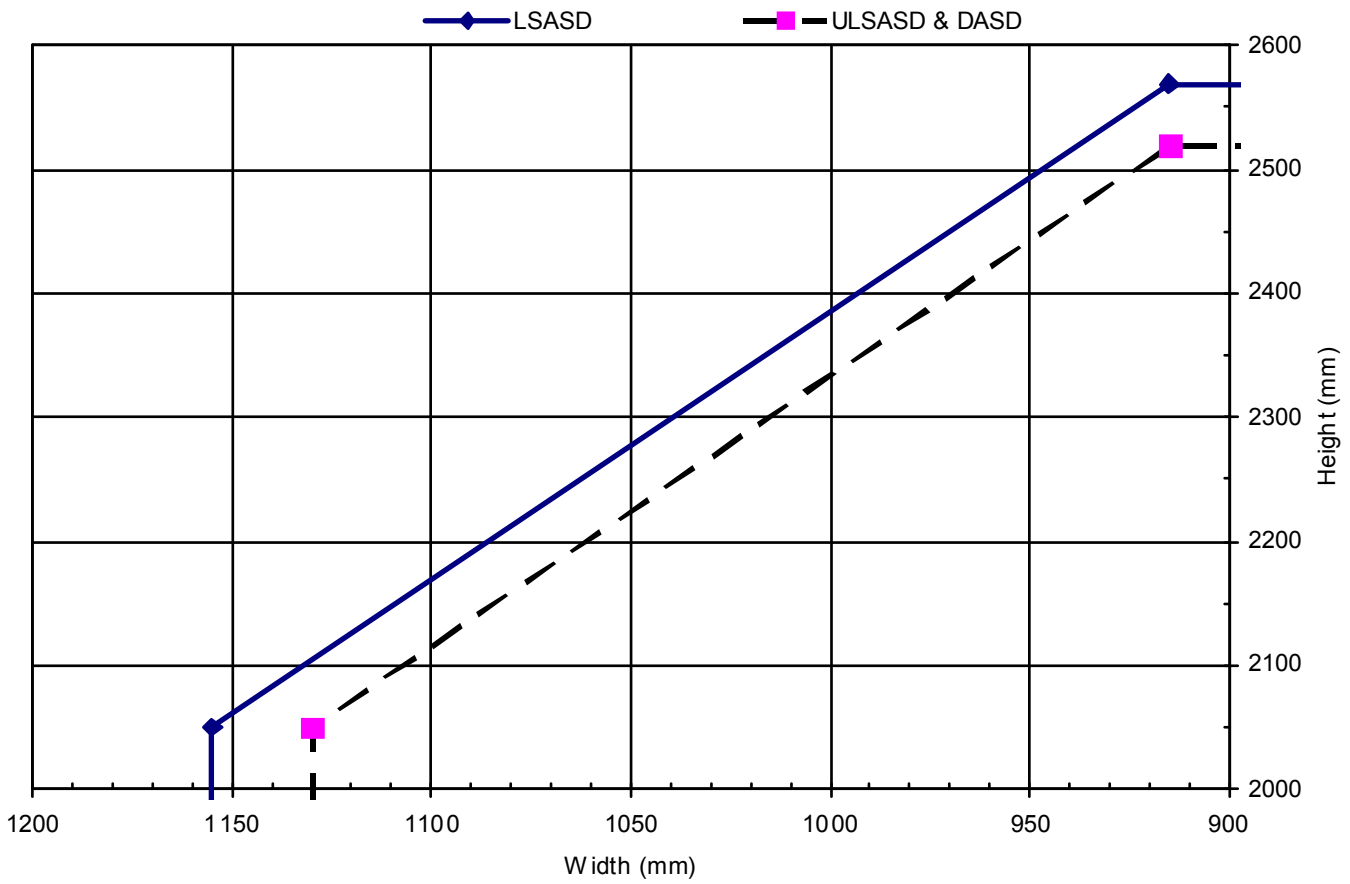

KLW Wood Products - Designs A & C – 41 & 44mm Flat Doors

Latched & Unlatched, Single & Double Acting, Double Doorsets

Leaf Sizes	Configuration		Height (mm)		Width (mm)
	LSADD	From:	2050	x	1105
		To:	2469	x	915
	ULSADD & DADD	From:	2050	x	1078
		To:	2419	x	915
Maximum Overpanel Height (mm)		Transomed	1500		
Glazing		Maximum Glazed Area	0.57m^2 - see section 7 for details		
		Approved Systems	See section 7 and appendix B		
Frame Specification (see section 8)		Min. Section (mm)	70 x 32	70 x 32	70 x 30
		Material	Softwood	Hardwood	MDF
		Min. Density (kg/m^3)	510	510	700

Intumescent Materials: Lorient Polyproducts Ltd. – Type 617

Head: 1No. 15x4mm strip fitted centrally in the frame reveal. For leaves over 2250mm high, increase to 20x4mm.

Meeting Edges: 1No. 15x4mm strip fitted centrally in the edge of one leaf only.

Jambs & Transomed Overpanels: 1No. 15x4mm strip fitted centrally in the frame reveal.

Hardware Protection: See section 11.

Maximum Door Leaf Size

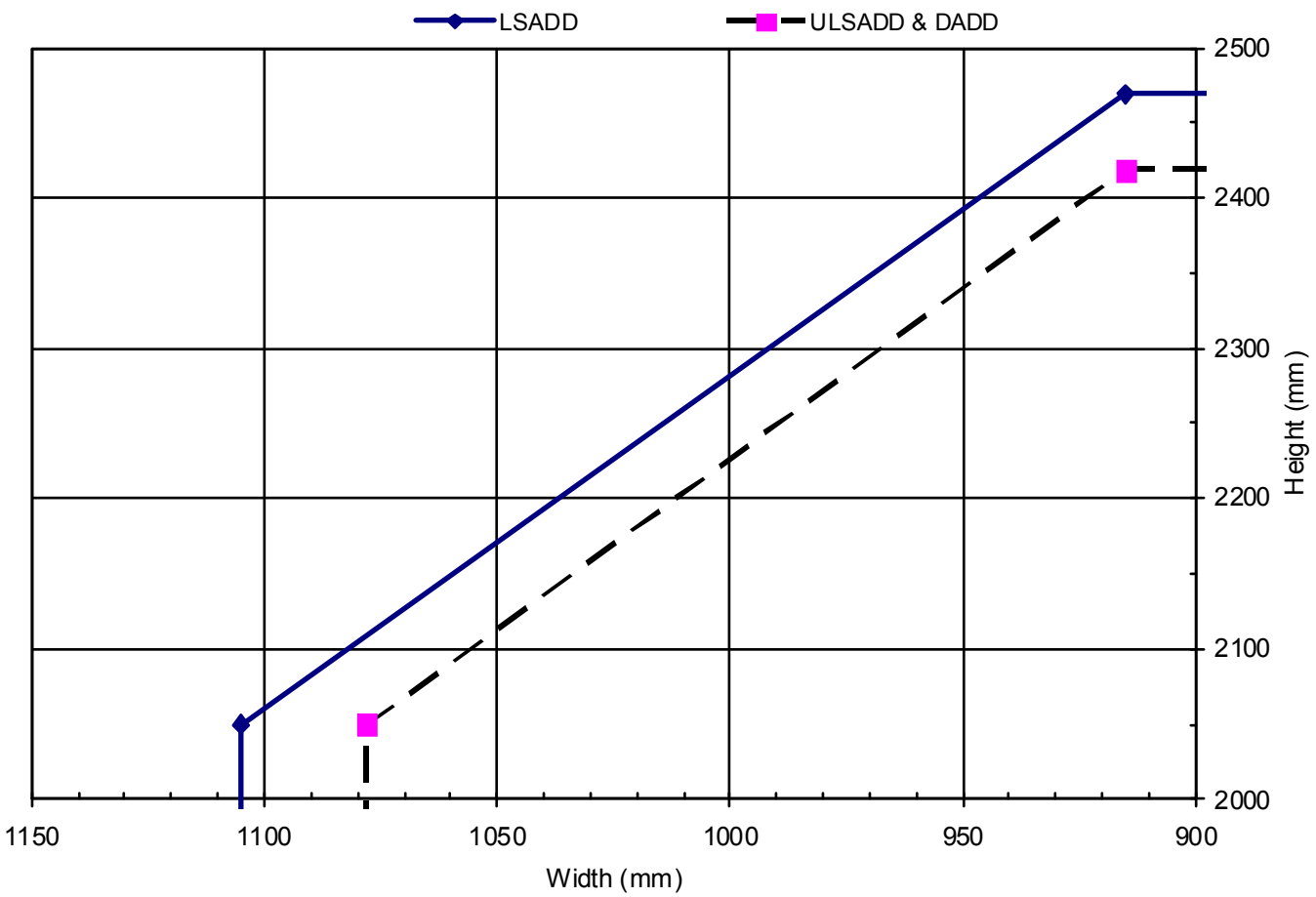

KLW Wood Products – Design B – Panelled Feature Doors

Latched, Single Acting, Single Doorsets

Leaf Sizes	Configuration		Height (mm)		Width (mm)
	LSASD	From:	2050	x	1078
		To:	2419	x	915
Maximum Overpanel Height (mm)		Transomed	2000		
Glazing		Maximum Glazed Area	0.57m^2 - see section 7 for details		
		Approved Systems	See section 7 and appendix B		
Frame Specification (see section 8)		Min. Section (mm)	70 x 32	70 x 32	70 x 30
		Material	Softwood	Hardwood	MDF
		Min. Density (kg/m^3)	510	510	700

Intumescent Materials: Lorient Polyproducts Ltd. – Type 617

Head: 1No. 15x4mm strip fitted centrally in the frame reveal. For leaves over 2300mm high, increase to 20x4mm.

Jambs & Transomed Overpanel: 1No. 15x4mm strip fitted centrally in the frame reveal.

Hardware Protection: See section 11.
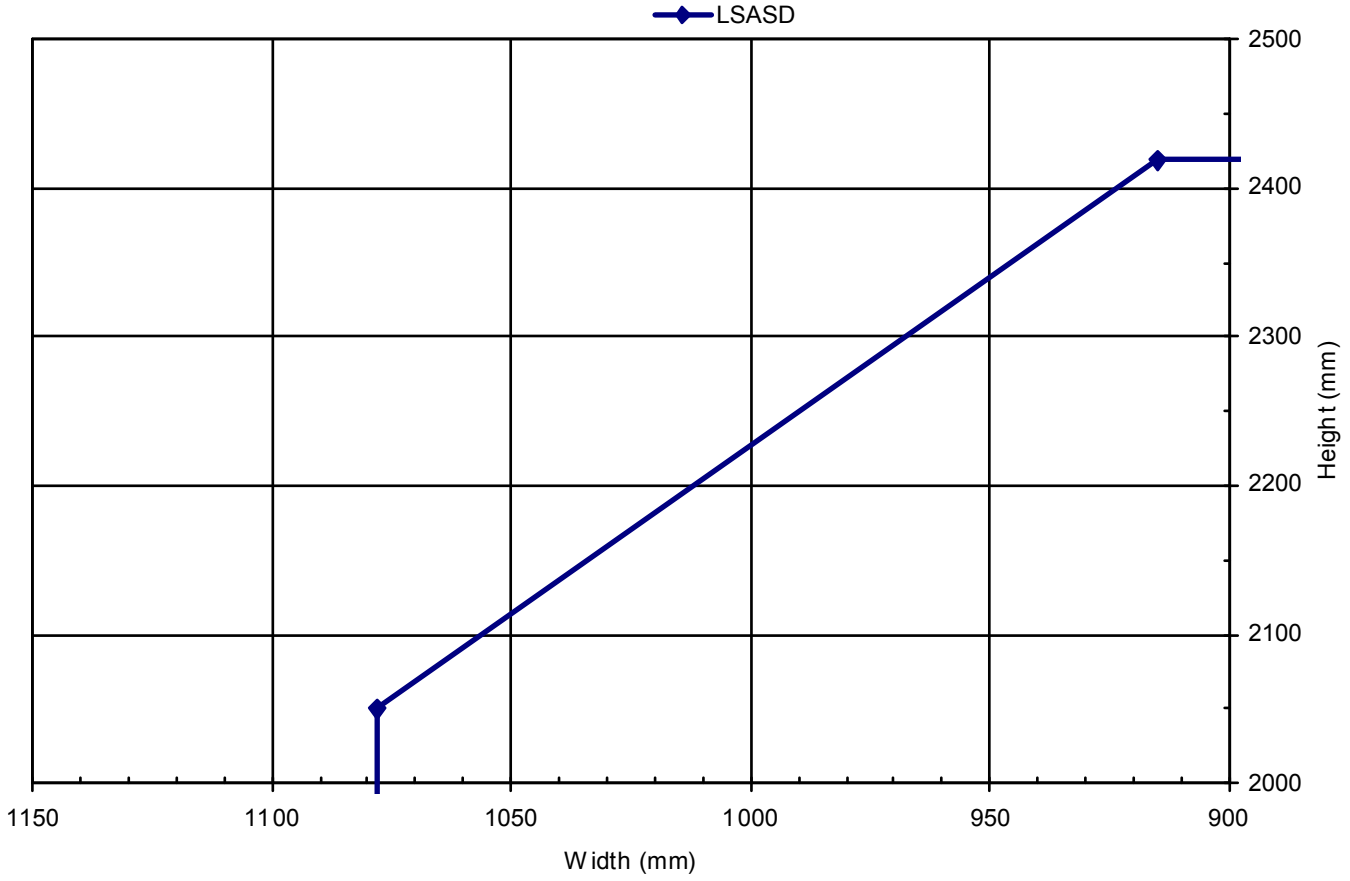
Maximum Door Leaf Size